ORFORDVILLE SALT SHED

ROCK COUNTY PUBLIC WORKS

734 WEST BELOIT STREET
ORFORDVILLE, WI

ANGUS-YOUNG
ARCHITECTS/ENGINEERS
Janesville | Madison

ORFORDVILLE SALT SHED

AY PROJECT NUMBER: 74660

SHEET INDEX:

G001 COVER SHEET

SITE SURVEY (BY OTHERS)
C100 EXISTING SITE & DEMOLITION PLAN
C101 SITE LAYOUT PLAN
C300 OVERALL SITE GRADING PLAN
C301 SITE GRADING PLAN - WEST
C302 SITE GRADING PLAN - EAST
C303 SITE EROSION CONTROL PLAN
C401 SITE UTILITY PLAN
C601 LANDSCAPE PLAN
C801 SITE DETAILS
C802 EROSION CONTROL NOTES AND DETAILS

A101 SALT SHED PLAN AND DETAILS
A401 BUILDING ELEVATIONS
A601 BUILDING SECTION VIEW
A602 BUILDING SECTION VIEW

S101 STRUCTURAL FOUNDATION PLANS AND NOTES
S102 WALL REINFORCEMENT PLAN
S801 STRUCTURAL DETAILS

E101 SALT SHED ELECTRICAL PLAN AND ONE LINE DIAGRAM
E102 SALT SHED PHOTOMETRIC CALCULATIONS

REGULATORY DATA:

PROJECT ADDRESS
734 WEST BELOIT STREET
ORFORDVILLE, WI

BUILDING CODE
WISCONSIN ENROLLED 2015 IBC

USE AND OCCUPANCY CLASSIFICATION
S-2 - LOW HAZARD STORAGE

GENERAL BUILDING HEIGHT AND AREA
AREA = 6,624 S.F.
STORIES = 1
MAXIMUM HEIGHT = 39'-9"

TYPE OF CONSTRUCTION
5B - WOOD FRAMED

LOCATION MAP:

PROJECT LOCATION

ORFORDVILLE, WI

ISSUANCES / REVISIONS		
NO:	DESCRIPTION:	DATE:
BD	BID/CONSTRUCTION	02/01/2023

Due to electronic distribution, this drawing may not be printed to the scale indicated on the drawings. Do NOT use scale to determine dimensions or sizes.

No part of this drawing may be used or reproduced in any form or by any means, or stored in a database or retrieval system, without prior written permission of.

ANGUS - YOUNG ASSOCIATES, INC. Copyright © 2022 All Rights Reserved

PROJECT TEAM

OWNER:
ROCK COUNTY
51 S. MAIN STREET
JANESVILLE, WI 53545
CONTACT: BRENT SUTHERLAND
EMAIL: brent.sutherland@co.rock.wi.us
PHONE: Owner Phone

ARCHITECT:
ANGUS-YOUNG ASSOCIATES, INC.
555 S. River St.
Janesville, WI 53548
CONTACT: BRAD WERGINZ
EMAIL: b.werginz@angusyoung.com
PHONE: (608)756-2326

STRUCTURAL ENGINEER:
ANGUS-YOUNG ASSOCIATES, INC.
555 S. River St.
Janesville, WI 53548
CONTACT: ZACHARY GOSWICK, PE
EMAIL: z.goswick@angusyoung.com
PHONE: (608)756-2326

CIVIL ENGINEER:
ANGUS-YOUNG ASSOCIATES, INC.
555 S. River St.
Janesville, WI 53548
CONTACT: SUZANNE SCHLEEPER, PE
EMAIL: s.schleeper@angusyoung.com
PHONE: (608)756-2326

ELECTRICAL ENGINEER:
ANGUS-YOUNG ASSOCIATES, INC.
555 S. River St.
Janesville, WI 53548
CONTACT: MITCHELL ABENDROTH
EMAIL: m.abendroth@angusyoung.com
PHONE: (608)756-2326

LANDSCAPE ARCHITECT:
ANGUS-YOUNG ASSOCIATES, INC.
555 S. River St.
Janesville, WI 53548
CONTACT: KATIE UDELL, PLA
EMAIL: k.udell@angusyoung.com
PHONE: (608)756-2326

24	20	16	12	08	04
23	19	15	11	07	03
22	18	14	10	06	02
21	17	13	09	05	01

TITLE BLOCK

DETAILS IN THIS SET ARE PLACED ON THE SHEETS AND NUMBERED WITH RESPECT TO THE GRID ABOVE. CONSEQUENTLY, DETAILS ON A GIVEN SHEET MAY OR MAY NOT BE NUMBERED CONSECUTIVELY.

608.756.2326
www.angusyoung.com

COVER SHEET

G001

SCALE: 1" = 1'-0"
PLOTTED BY: BradW
X:\74660\cad\74660sht\G001.dgn
ORIGINAL SIZE: 24" x 36"

TOPOGRAPHIC SURVEY

OF THE LAND DESCRIBED AS:

LOT 1 OF A CERTIFIED SURVEY MAP RECORDED DECEMBER 28, 1993, AS DOCUMENT #1220542, IN VOLUME 17 OF CERTIFIED SURVEY MAPS, ON PAGES 97 AND 98, IN THE OFFICE OF THE REGISTER OF DEEDS FOR ROCK COUNTY, WISCONSIN; BEING PART OF OUTLOT 1 OF THE ASSESSOR'S PLAT OF THE VILLAGE OF ORFORDVILLE, IN THE VILLAGE OF ORFORDVILLE, COUNTY OF ROCK AND STATE OF WISCONSIN.

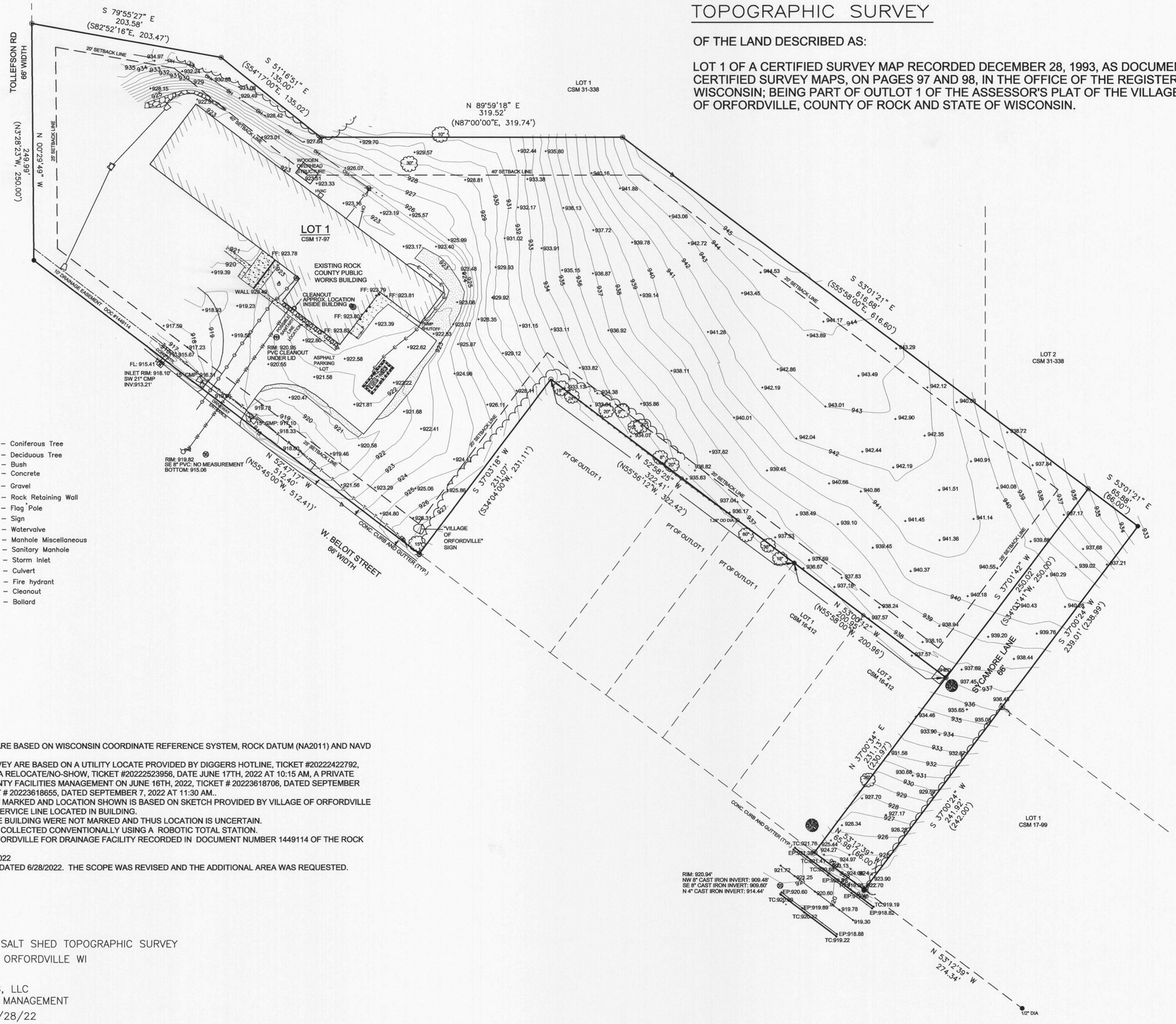

LEGEND:

- 3/4" x 24" rebar set (1.50 lbs / linear foot)
- 3/4" rebar found unless otherwise indicated
- 1" Iron Pipe Found unless otherwise indicated
- (#) – Record Information
- Powerpole
- GM – Gas Meter
- Cabinet
- Pedestal
- Marker Post
- Fence line
- Property line
- Easement
- Setback line
- Telecommunications line
- Electric Line
- Watermain
- OH – Overhead utility line
- Gas line
- Coniferous Tree
- Deciduous Tree
- Bush
- Concrete
- Gravel
- Rock Retaining Wall
- Flag Pole
- Sign
- Watervalve
- Manhole Miscellaneous
- Sanitary Manhole
- Storm Inlet
- Culvert
- Fire hydrant
- Cleanout
- Bollard

NOTES

1. COORDINATES AND ELEVATIONS ARE BASED ON WISCONSIN COORDINATE REFERENCE SYSTEM, ROCK DATUM (NA2011) AND NAVD 1988.
2. UTILITIES DEPICTED ON THIS SURVEY ARE BASED ON A UTILITY LOCATE PROVIDED BY DIGGERS HOTLINE, TICKET #20222422792, DATE: JUNE 9TH, 2022 AT 1:40 PM, A RELOCATE/NO-SHOW, TICKET #20222523956, DATE JUNE 17TH, 2022 AT 10:15 AM, A PRIVATE LOCATE PROVIDED BY ROCK COUNTY FACILITIES MANAGEMENT ON JUNE 16TH, 2022, TICKET # 20223618706, DATED SEPTEMBER 7TH, 2022 AT 11:30 AM, AND TICKET # 20223618655, DATED SEPTEMBER 7, 2022 AT 11:30 AM..
3. WATER SERVICE LINES WERE NOT MARKED AND LOCATION SHOWN IS BASED ON SKETCH PROVIDED BY VILLAGE OF ORFORDVILLE ON JUNE 17TH, 2022 AND WATER SERVICE LINE LOCATED IN BUILDING.
4. SANITARY SEWER LINES NEAR THE BUILDING WERE NOT MARKED AND THUS LOCATION IS UNCERTAIN.
5. ALL FIELD MEASUREMENTS WERE COLLECTED CONVENTIONALLY USING A ROBOTIC TOTAL STATION.
6. 10' EASEMENT TO VILLAGE OF ORFORDVILLE FOR DRAINAGE FACILITY RECORDED IN DOCUMENT NUMBER 1449114 OF THE ROCK COUNTY REGISTER OF DEEDS.
7. LAST DAY OF FIELD WORK: 10/26/2022
8. THIS PLAT UPDATES THE SURVEY DATED 6/28/2022. THE SCOPE WAS REVISED AND THE ADDITIONAL AREA WAS REQUESTED.

WISCONSIN
BRADLEY P. HEUER
S-3030
ROSCOE IL.
LAND SURVEYOR

BRADLEY P. HEUER
WISCONSIN LAND SURVEYOR S-3030

State of Wisconsin }ss
County of Rock

I hereby certify that I have supervised the survey of the property described hereon and that to the best of my knowledge and belief, the plat drawn hereon correctly represents said survey and its location and complies with Chapter AE-7.
Given under my hand and seal this 28th day of October, 2022 at Janesville, WI.
Last day of fieldwork: October 26th, 2022.

PROJECT NAME: ORFORDVILLE SALT SHED TOPOGRAPHIC SURVEY
ADDRESS: 734 W. BELOIT ST., ORFORDVILLE WI
OWNER: COUNTY OF ROCK
REQUESTED BY: ANGUS YOUNG, LLC
AND ROCK COUNTY FACILITIES MANAGEMENT
DATE OF ORIGINAL SURVEY: 6/28/22
REVISED: 10/28/22

ROCK COUNTY SURVEYORS OFFICE
51 S. MAIN STREET
JANESVILLE, WI. 53545
PH. 608-757-5658

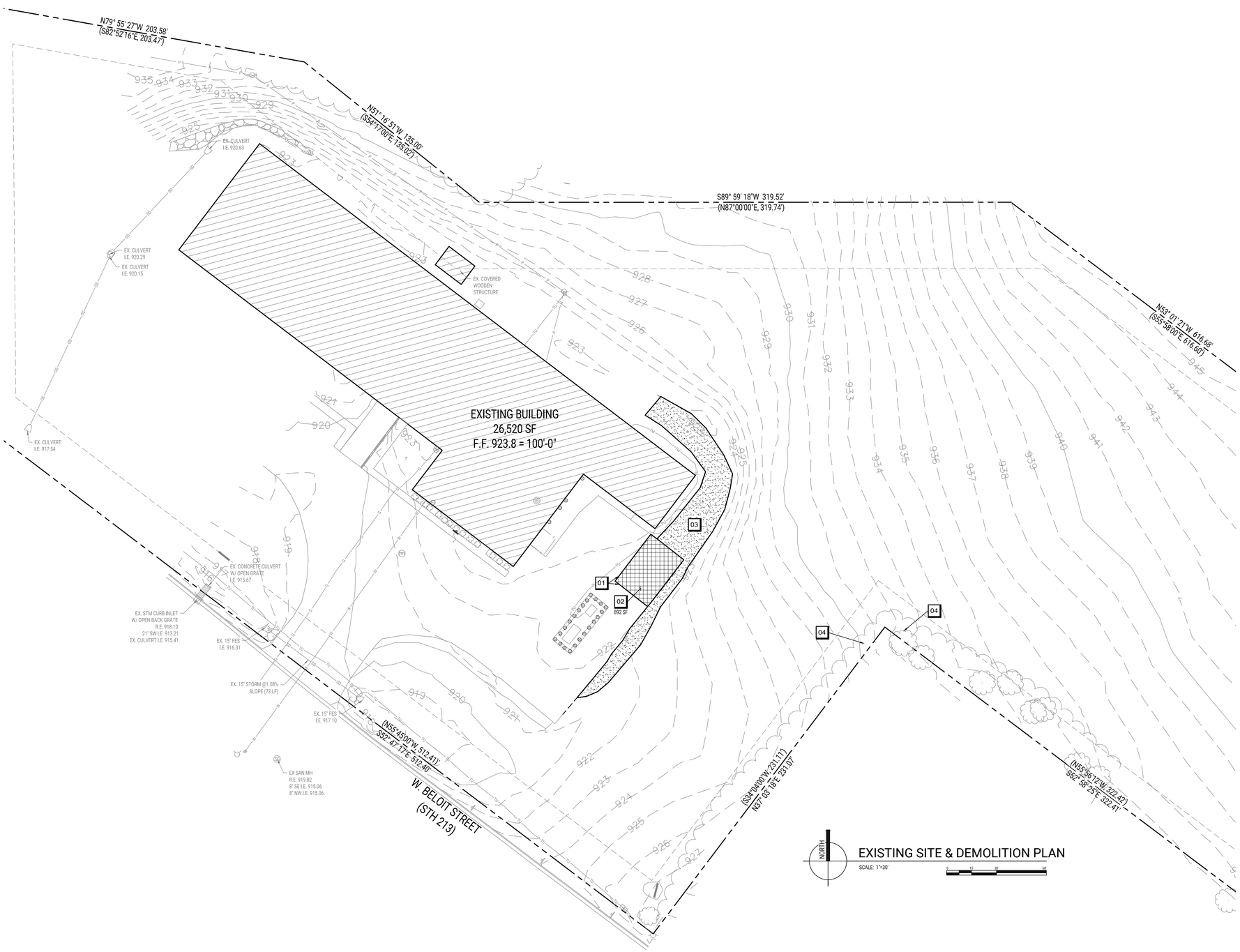

DIGGERS HOTLINE

CALL TOLL FREE 1-800-242-8511
MILWAUKEE AREA 414-259-1181
FAX A LOCATE 1-800-338-3860
TDD (HEARING IMPAIRED) 1-800-542-2289
ONLINE: www.DiggersHotline.com

WISCONSIN STATUE 182.0175 (1974) REQUIRES A MINIMUM OF THREE (3) WORKING DAYS NOTICE PRIOR TO EXCAVATION.

SITE GENERAL NOTES

1. TRUE NORTH MAY VARY FROM PROJECT NORTH.
2. CONSTRUCTION PRACTICES, MEANS AND METHODS, AND JOB SITE SAFETY, SHALL REMAIN THE SOLE RESPONSIBILITY OF THE CONTRACTOR.
3. ALL WORK SHALL BE PERFORMED IN COMPLIANCE WITH THE FEDERAL OCCUPATIONAL HEALTH AND SAFETY ADMINISTRATION (OSHA), AND ALL FEDERAL, STATE AND LOCAL CODES AND ORDINANCES AS THEY PERTAIN TO THIS PROJECT.
4. FIELD VERIFY ALL EXISTING AND PROPOSED UTILITIES, ELEVATIONS AND DIMENSIONS.
5. COORDINATE WITH THE AUTHORITY HAVING JURISDICTION AND UTILITY COMPANIES AS NECESSARY.
6. BUILDING SHALL BE ORIENTED PARALLEL AND PERPENDICULAR TO EXISTING BUILDING AND/OR PROPERTY LINE AS SHOWN ON DRAWING.
7. ALL EXTERIOR CONCRETE SIDEWALKS AND YARD SLABS SHALL BE 4,000 PSI. ALL CONCRETE PAVEMENT SHALL BE 4,500 PSI UNLESS NOTED OTHERWISE.
8. ALL DAMAGED ASPHALT ON STH 213 SHOULD BE PATCHED WITH A MINIMUM 10-FOOT LONG PATCH THAT EXTENDS TO THE CENTERLINE.

DEMOLITION NOTES

1. FOR EXISTING BUILDING TO BE REMOVED, REMOVE STRUCTURE, FOOTINGS AND ASSOCIATED WALK AND PAVEMENT. DISCONNECT EXISTING UTILITY SERVICE LINES PER CITY, COUNTY AND STATE SPECIFICATIONS.
2. FOR EXISTING PAVEMENTS, CURBING, AND SITE AMENITIES, REMOVE ALL AT-GRADE AND BELOW GRADE SITE WORK PER OWNER.
3. CONTRACTOR SHALL FIELD VERIFY ALL EXISTING SITE CONDITIONS PRIOR TO COMMENCING WORK AND COORDINATE WITH OWNER ANY ADDITIONAL ITEMS NOT SHOWN ON THE PLANS.
4. CONTRACTOR SHALL CALL FOR UTILITY LOCATIONS PRIOR TO COMMENCING ALL WORK ON SITE.
5. CONTRACTOR SHALL PROVIDE ALL NECESSARY EROSION CONTROL MEASURES PER LOCAL AND STATE REQUIREMENTS. ALL MEASURES SHALL BE INSTALLED PRIOR TO COMMENCING WORK ON THE SITE. SEE EROSION CONTROL PLAN FOR ADDITIONAL INFORMATION.
6. CONTRACTOR SHALL OBTAIN ALL NECESSARY PERMITS FOR DEMOLITION AND CONSTRUCTION PRIOR TO COMMENCING ALL WORK ON THE SITE.
7. CONTRACTOR SHALL PROTECT ALL TREES NOT MARKED FOR DEMOLITION.
8. CONTRACTOR SHALL TRIM TREES AS NEEDED. CONTRACTOR SHALL OBTAIN OWNER APPROVAL IF AN EXISTING TREE NEEDS TO BE REPLACED IF IT SEEMS UNHEALTHY TO REMAIN OR IT ENCROACHES THE BUILDING.

KEYNOTES

01 SAWCUT LIMITS. MATCH INTO EXISTING ALIGNMENT & GRADE.

02 SAWCUT AND REMOVE EXISTING PAVEMENT.

03 REMOVE EXISTING GRAVEL FOR NEW BUILDING AND SITE CONSTRUCTION. CONTRACTOR TO RE-USE GRAVEL PER OWNER'S DIRECTION.

04 CLEAR AND GRUB TREES AS NECESSARY TO ALLOW FOR FINAL GRADING. CONTRACTOR SHALL NOTIFY PROPERTY OWNER PRIOR TO ANY CLEARING AND GRUBBING ACTIVITIES.

DEMOLITION & REMOVALS LEGEND

	CURB REMOVAL
	SIDEWALK REMOVAL
	PAVEMENT REMOVAL
XXX	EXISTING INTERMEDIATE CONTOUR
XXX	EXISTING INDEX CONTOUR
SD	STORM DRAIN
SS	SANITARY SEWER
W	WATER
G	GAS
P	ELECTRICAL POWER
PU	UNDERGROUND ELECTRICAL POWER
FOU	UNDERGROUND FIBER OPTIC
T	TELEPHONE
TU	UNDERGROUND TELEPHONE
CATV	CABLE
	EDGE OF TREES OR SHRUBS

NOTE: ALL SYMBOLS MAY NOT BE USED IN THIS SET.

ANGUS-YOUNG
ARCHITECTS/ENGINEERS
Janesville | Madison

ROCK COUNTY

ORFORDVILLE SALT SHED

734 W. BELOIT STREET
ORFORDVILLE, WI 53576

ROCK COUNTY
WISCONSIN

ISSUANCES / REVISIONS		
NO:	DESCRIPTION:	DATE:
01	VILLAGE SITE PLAN SUBMITTAL	09.23.2022
02	VILLAGE SITE PLAN SUBMITTAL	01.13.2023
03	FOR BIDDING	02.01.2023
	---	---
	---	---
	---	---
	---	---
	---	---
	---	---
	---	---
	---	---
	---	---
	---	---
	---	---
	---	---
	---	---

1:08:28 PM 1/13/2023

Due to electronic distribution, this drawing may not be printed to the scale indicated on the drawings. Do NOT use scale to determine dimensions or sizes.

No part of this drawing may be used or reproduced in any form or by any means, or stored in a database or retrieval system, without prior written permission of.

ANGUS - YOUNG ASSOCIATES, INC.
Copyright © 2023 All Rights Reserved

PROJECT NUMBER
74660

APPROVED BY
BTW

REVIEWED BY
KAU

DRAWN BY
MWT

EXISTING SITE & DEMOLITION PLAN

C100

FILE: X:\74660\cad\74660dwg\C100.dwg SCottsinger

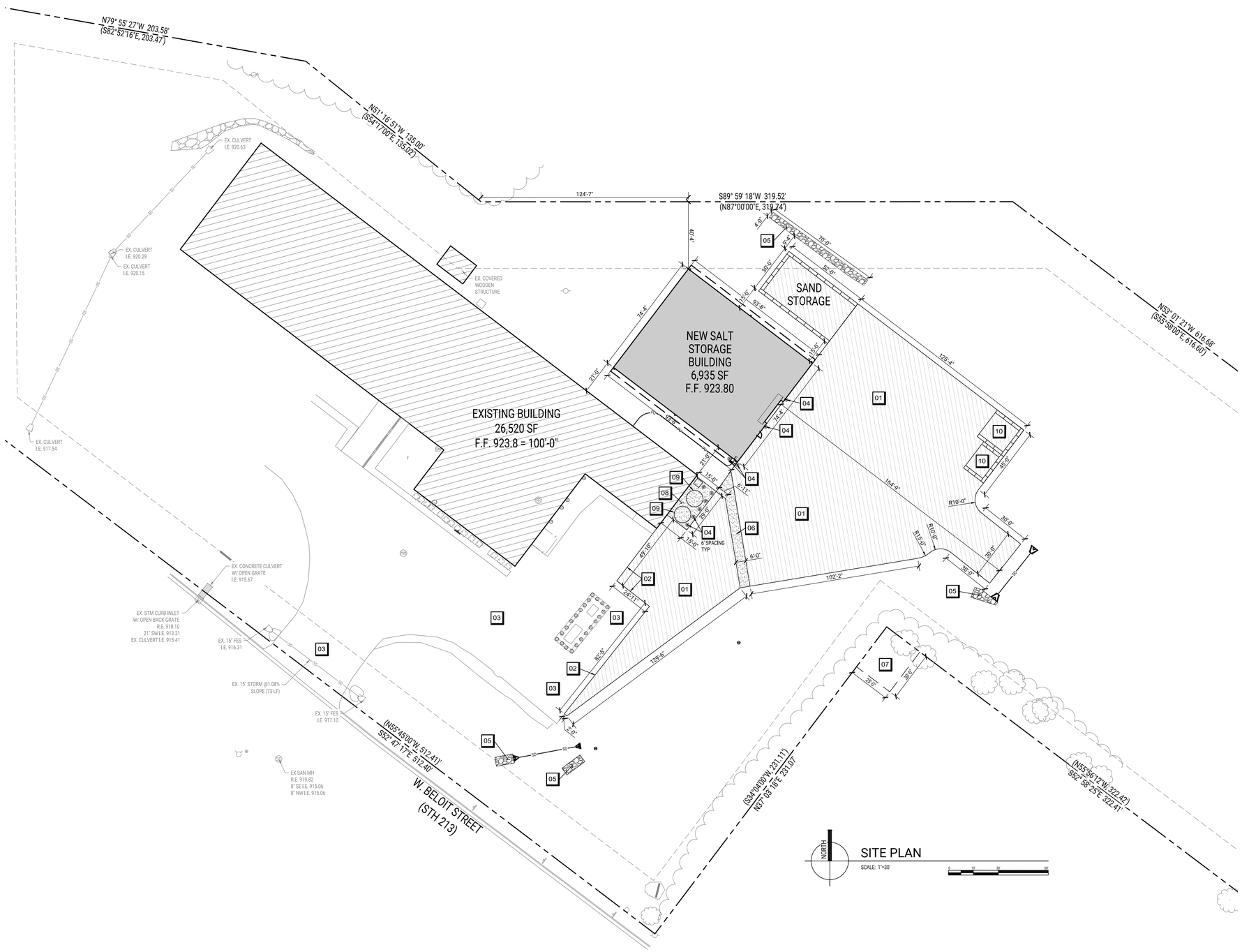

DIGGERS HOTLINE

CALL TOLL FREE 1-800-242-8511
MILWAUKEE AREA 414-259-1181
FAX A LOCATE 1-800-338-3860
TDD (HEARING IMPAIRED) 1-800-542-2289
ONLINE: www.DiggersHotline.com

WISCONSIN STATUE 182.0175 (1974) REQUIRES A MINIMUM OF THREE (3) WORKING DAYS NOTICE PRIOR TO EXCAVATION.

SITE GENERAL NOTES

1. TRUE NORTH MAY VARY FROM PROJECT NORTH.
2. CONSTRUCTION PRACTICES, MEANS AND METHODS, AND JOB SITE SAFETY, SHALL REMAIN THE SOLE RESPONSIBILITY OF THE CONTRACTOR.
3. ALL WORK SHALL BE PERFORMED IN COMPLIANCE WITH THE FEDERAL OCCUPATIONAL HEALTH AND SAFETY ADMINISTRATION (OSHA), AND ALL FEDERAL, STATE AND LOCAL CODES AND ORDINANCES AS THEY PERTAIN TO THIS PROJECT.
4. FIELD VERIFY ALL EXISTING AND PROPOSED UTILITIES, ELEVATIONS AND DIMENSIONS.
5. COORDINATE WITH THE AUTHORITY HAVING JURISDICTION AND UTILITY COMPANIES AS NECESSARY.
6. BUILDING SHALL BE ORIENTED PARALLEL AND PERPENDICULAR TO EXISTING BUILDING AND/OR PROPERTY LINE AS SHOWN ON DRAWING.
7. ALL EXTERIOR CONCRETE SIDEWALKS AND YARD SLABS SHALL BE 4,000 PSI. ALL CONCRETE PAVEMENT SHALL BE 4,500 PSI UNLESS NOTED OTHERWISE.
8. ALL DAMAGED ASPHALT ON STH 213 SHOULD BE PATCHED WITH A MINIMUM 10-FOOT PATCH THAT EXTENDS TO THE CENTERLINE OF THE ROADWAY. PAVEMENT SHALL BE REPLACED IN-KIND WITH A MINIMUM OF 4" ASPHALT PAVEMENT.

KEYNOTES

01	NEW BITUMINOUS PAVEMENT. SEE DETAIL 01/C801.
02	SAWCUT LIMITS. MATCH EXISTING PAVEMENT.
03	EXISTING PAVEMENT TO REMAIN.
04	NEW 72" HIGH, 8" DIA. CONCRETE FILLED PIPE BOLLARD. SEE DETAIL 03/C801.
05	NEW RIP RAP WITH GEOTEXTILE FABRIC, MEDIUM, 12" THICK.
06	NEW 3" DEEP, 6' WIDE CONCRETE STRIP TO CHANNEL WATER ACROSS PAVEMENT. SEE DETAIL 02/C801.
07	NEW 25'-0" X 30'-0" TEMPORARY CONSTRUCTION GRADING EASEMENT. CONTRACTOR SHALL NOTIFY PROPERTY OWNER PRIOR TO GRADING ACTIVITIES.
08	NEW CONCRETE PAVEMENT. SEE DETAIL 05/C801.
09	NEW BRINE TANK LOCATIONS.
10	NEW EXCESS MATERIAL BINS.
11	NOT USED.

SITE SYMBOL LEGEND

	SIGN
	BOLLARD
	FIRE HYDRANT
	MANHOLE/CATCH BASIN/INLET
	CURB INLET
	NEW FLARED END SECTION WITH RIPRAP AND GUARD
	WATER VALVE OR GAS VALVE
	GAS METER
	LIGHT POLE
	UTILITY POLE
	GUY WIRE
TR	TRANSFORMER
E CT	ELECTRIC METER AND CT CABINET
	NEW STRUCTURE OR ADDITION
	EXISTING STRUCTURE

ALL SYMBOLS MAY NOT BE USED IN THIS SET.

PROJECT - SITE CALCULATIONS			
Total Property	**341,946 sf**	**7.85 ac**	
Total Disturbed Area	**166,525 sf**	**3.82 ac**	
Zoning District:	I-1 Light Industrial District		
Setbacks:	25'-0"	Front Yard	
	20'-0"	Interior Side	
	25'-0"	Street Side Yard	
	40'-0"	Rear Yard	
Maximum Building Height:	90'-0"		
Minimum Greenspace Requirement:	10%	34,195 sf	
Use:	Public Utility Facility		

Existing Site = Total Disturbed Area					
Existing Buildings	136	sf	0.00	ac	
Existing Pavement	3,393	sf	0.08	ac	
Total Existing Impervious	3,529	sf	0.08	ac	*2%*
Remainder Greenspace	162,996	sf	3.74	ac	*98%*

Proposed Site = Total Disturbed Area					
New Building	7,493	sf	0.17	ac	
New Pavement	16,183	sf	0.37	ac	
Total New & Existing Impervious	23,812	sf	0.55	ac	*14%*
Remainder Greenspace	142,713	sf	3.28	ac	*86%*

Total Additional New Impervious Area	20,283	sf

ANGUS-YOUNG
ARCHITECTS/ENGINEERS
Janesville | Madison

ROCK COUNTY

ORFORDVILLE SALT SHED

734 W. BELOIT STREET
ORFORDVILLE, WI 53576

ROCK COUNTY
WISCONSIN

ISSUANCES / REVISIONS		
NO:	DESCRIPTION:	DATE:
01	VILLAGE SITE PLAN SUBMITTAL	09.23.2022
02	VILLAGE SITE PLAN SUBMITTAL	01.13.2023
03	FOR BIDDING	02.01.2023

1:08:35 PM 1/13/2023

Due to electronic distribution, this drawing may not be printed to the scale indicated on the drawings. Do NOT use scale to determine dimensions or sizes.

No part of this drawing may be used or reproduced in any form or by any means, or stored in a database or retrieval system, without prior written permission of.

ANGUS - YOUNG ASSOCIATES, INC.
Copyright © 2023 All Rights Reserved

PROJECT NUMBER
74660

APPROVED BY
BTW

REVIEWED BY
KAU

DRAWN BY
MWT

SITE LAYOUT PLAN

C101

FILE: X:\1460\cad\74660\dwg\C101.dwg mtrooper

DIGGERS HOTLINE

CALL TOLL FREE 1-800-242-8511
MILWAUKEE AREA 414-259-1181
FAX A LOCATE 1-800-338-3860
TDD (HEARING IMPAIRED) 1-800-542-2289
ONLINE: www.DiggersHotline.com

WISCONSIN STATUE 182.0175 (1974) REQUIRES A MINIMUM OF THREE (3) WORKING DAYS NOTICE PRIOR TO EXCAVATION.

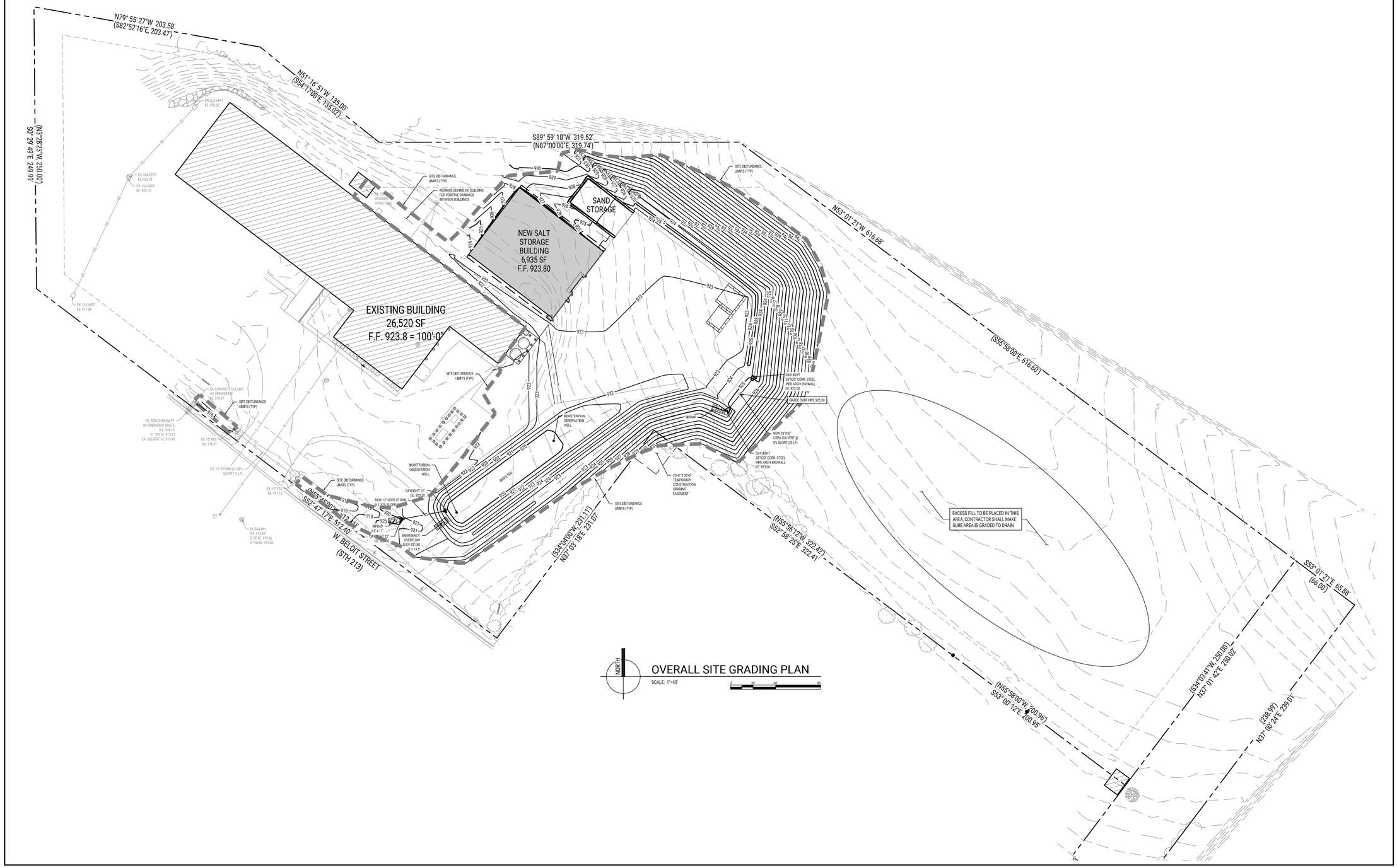

OVERALL SITE GRADING PLAN

SCALE: 1"=40'

ANGUS-YOUNG
ARCHITECTS/ENGINEERS
Janesville | Madison

ROCK COUNTY

ORFORDVILLE SALT SHED

734 W. BELOIT STREET
ORFORDVILLE, WI 53576

ROCK COUNTY
WISCONSIN

ISSUANCES / REVISIONS

NO:	DESCRIPTION:	DATE:
01	VILLAGE SITE PLAN SUBMITTAL	09.23.2022
02	VILLAGE SITE PLAN SUBMITTAL	01.13.2023
03	FOR BIDDING	02.01.2023
	---	---
	---	---
	---	---
	---	---
	---	---
	---	---
	---	---
	---	---
	---	---
	---	---
	---	---
	---	---
	---	---

1:08:45 PM 1/13/2023

Due to electronic distribution, this drawing may not be printed to the scale indicated on the drawings. Do NOT use scale to determine dimensions or sizes.

No part of this drawing may be used or reproduced in any form or by any means, or stored in a database or retrieval system, without prior written permission of.

ANGUS - YOUNG ASSOCIATES, INC.
Copyright © 2023 All Rights Reserved

PROJECT NUMBER
74660

APPROVED BY
BTW

REVIEWED BY
KAU

DRAWN BY
MWT

OVERALL SITE GRADING PLAN

C300

FILE: X:\74660\cad\74660xC300.dwg mmoser

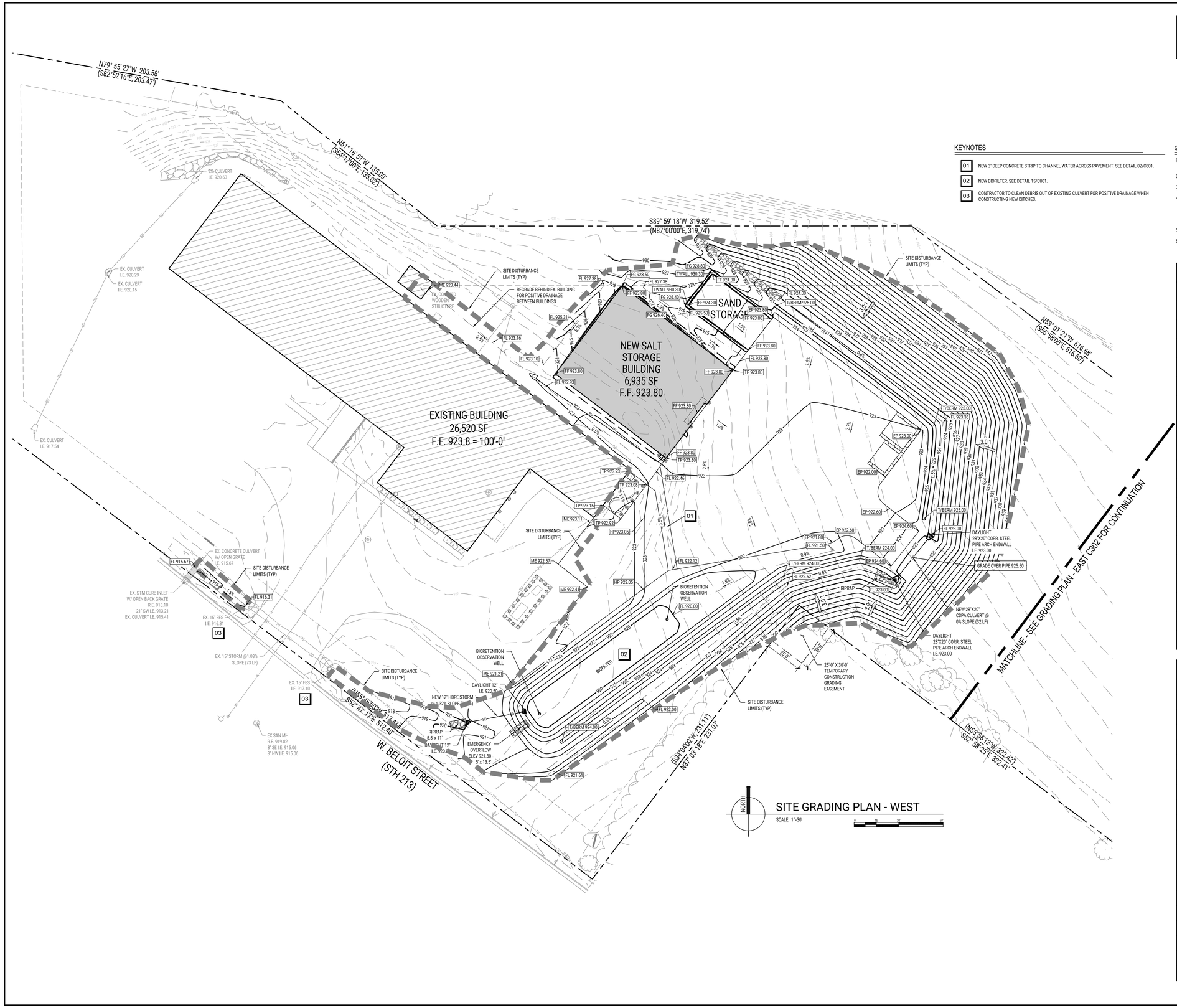

SITE GRADING PLAN - WEST

SCALE: 1"=30'

0 15' 30' 60'

DIGGERS HOTLINE

CALL TOLL FREE 1-800-242-8511
MILWAUKEE AREA 414-259-1181
FAX A LOCATE 1-800-338-3860
TDD (HEARING IMPAIRED) 1-800-542-2289
ONLINE: www.DiggersHotline.com

WISCONSIN STATUE 182.0175 (1974) REQUIRES A MINIMUM OF THREE (3) WORKING DAYS NOTICE PRIOR TO EXCAVATION.

KEYNOTES

01	NEW 3' DEEP CONCRETE STRIP TO CHANNEL WATER ACROSS PAVEMENT. SEE DETAIL 02/C801.
02	NEW BIOFILTER. SEE DETAIL 15/C801.
03	CONTRACTOR TO CLEAN DEBRIS OUT OF EXISTING CULVERT FOR POSITIVE DRAINAGE WHEN CONSTRUCTING NEW DITCHES.

GRADING NOTES

1. CONSTRUCTION FENCING TO BE INSTALLED AROUND ENTIRE CONSTRUCTION SITE. COORDINATE WITH OWNER FOR FENCING AND GATE LOCATIONS AND APPROPRIATE SIGNAGE INSTALLATION.
2. REFER TO OTHER PROJECT PLANS AND INFORMATION RELATED TO THIS PROJECT PRIOR TO BEGINNING ANY GRADING WORK.
3. CONTRACTOR SHALL LOCATE ALL UTILITIES THAT MAY AFFECT THEIR WORK AND NOTIFY OWNER OF ANY POTENTIAL CONFLICTS.
4. CONTRACTOR SHALL VERIFY ALL EXISTING AND PROPOSED ELEVATIONS PRIOR TO START OF CONSTRUCTION. VERIFY CRITICAL ELEVATIONS TO ENSURE CONFORMANCE WITH GRADING PLAN, PARTICULARLY WITH WALK AND/ OR PAVEMENTS TO REMAIN. MEET EXISTING GRADES ALONG STREETS, PROPERTY LINES AND DRIVEWAY ENTRANCES. RESTORE ALL EXISTING PAVEMENTS THAT REMAIN TO THEIR ORIGINAL, IF NOT BETTER CONDITION. NOTIFY OWNER OF ANY CONFLICTS.
5. AREAS NOT PAVED AND TO BE LANDSCAPED SHALL RECEIVE MINIMUM OF 4" DEPTH COMPACTED TOPSOIL.
6. CONTRACTOR SHALL COORDINATE GRADING AND INSTALLATION OF DRIVES IN R.O.W. WITH APPROPRIATE GOVERNMENT AGENCIES. OBTAIN APPROPRIATE PERMITS FOR GRADING AND DRAINAGE IN ALL R.O.W.

SITE SYMBOL LEGEND

	SIGN
	BOLLARD
	FIRE HYDRANT
	MANHOLE/CATCH BASIN/INLET
	CURB INLET
	NEW FLARED END SECTION WITH RIPRAP AND GUARD
EP XXX.XX	NEW EDGE OF PAVEMENT ELEVATION (FEET)
TP XXX.XX	NEW TOP OF PAVEMENT ELEVATION (FEET)
SW XXX.XX	NEW SIDEWALK ELEVATION (FEET)
FG XXX.XX	NEW FINISH GRADE ELEVATION (FEET)
ME XXX.XX	NEW MATCH EX. ELEVATION (FEET)
FL XXX.XX	NEW FLOW LINE ELEVATION (FEET)
FF XXX.XX	NEW FINISHED FLOOR ELEVATION (FEET)
TC XXX.XX BC XXX.XX	NEW TOP AND BOTTOM OF CURB ELEVATION (FEET)
TS XXX.XX BS XXX.XX	NEW TOP AND BOTTOM OF STEP ELEVATION (FEET)
RE / IE XXX.XX	RIM OR INVERT ELEVATION (FEET)
	WATER VALVE OR GAS VALVE
	GAS METER
	LIGHT POLE
	UTILITY POLE
	GUY WIRE
TR	TRANSFORMER
E CT	ELECTRIC METER AND CT CABINET
	NEW STRUCTURE OR ADDITION
	EXISTING STRUCTURE

ALL SYMBOLS MAY NOT BE USED IN THIS SET.

SITE LINE LEGEND

	PROPERTY LINE
	SETBACK LINE
	EASEMENT LINE
XXX	EXISTING INTERMEDIATE CONTOUR
XXX	EXISTING INDEX CONTOUR
XXX	NEW INTERMEDIATE CONTOUR
XXX	NEW INDEX CONTOUR
	PAVEMENT
X X	FENCE
SD SD SD	STORM DRAIN
SS SS	SANITARY SEWER
W W W	WATER
G G G	GAS
P P P	ELECTRICAL POWER
PU PU PU	UNDERGROUND ELECTRICAL POWER
FOU FOU	UNDERGROUND FIBER OPTIC
T T T	TELEPHONE
TU TU TU	UNDERGROUND TELEPHONE
CATV CATV	CABLE
	EDGE OF TREES OR SHRUBS

ALL SYMBOLS MAY NOT BE USED IN THIS SET.

ANGUS-YOUNG
ARCHITECTS/ENGINEERS
Janesville | Madison

ROCK COUNTY

ORFORDVILLE SALT SHED

734 W. BELOIT STREET
ORFORDVILLE, WI 53576

ROCK COUNTY
WISCONSIN

ISSUANCES / REVISIONS		
NO:	DESCRIPTION:	DATE:
01	VILLAGE SITE PLAN SUBMITTAL	09.23.2022
02	VILLAGE SITE PLAN SUBMITTAL	01.13.2023
03	FOR BIDDING	02.01.2023
	---	---
	---	---
	---	---
	---	---
	---	---
	---	---
	---	---
	---	---
	---	---
	---	---
	---	---
	---	---
	---	---

1:08:55 PM 1/13/2023

Due to electronic distribution, this drawing may not be printed to the scale indicated on the drawings. Do NOT use scale to determine dimensions or sizes.

No part of this drawing may be used or reproduced in any form or by any means, or stored in a database or retrieval system, without prior written permission of.

ANGUS - YOUNG ASSOCIATES, INC.
Copyright © 2023 All Rights Reserved

PROJECT NUMBER
74660

APPROVED BY
BTW

REVIEWED BY
KAU

DRAWN BY
MWT

SITE GRADING PLAN - WEST

C301

FILE: X:\74600\cad\74600\C301.dwg mtrooper

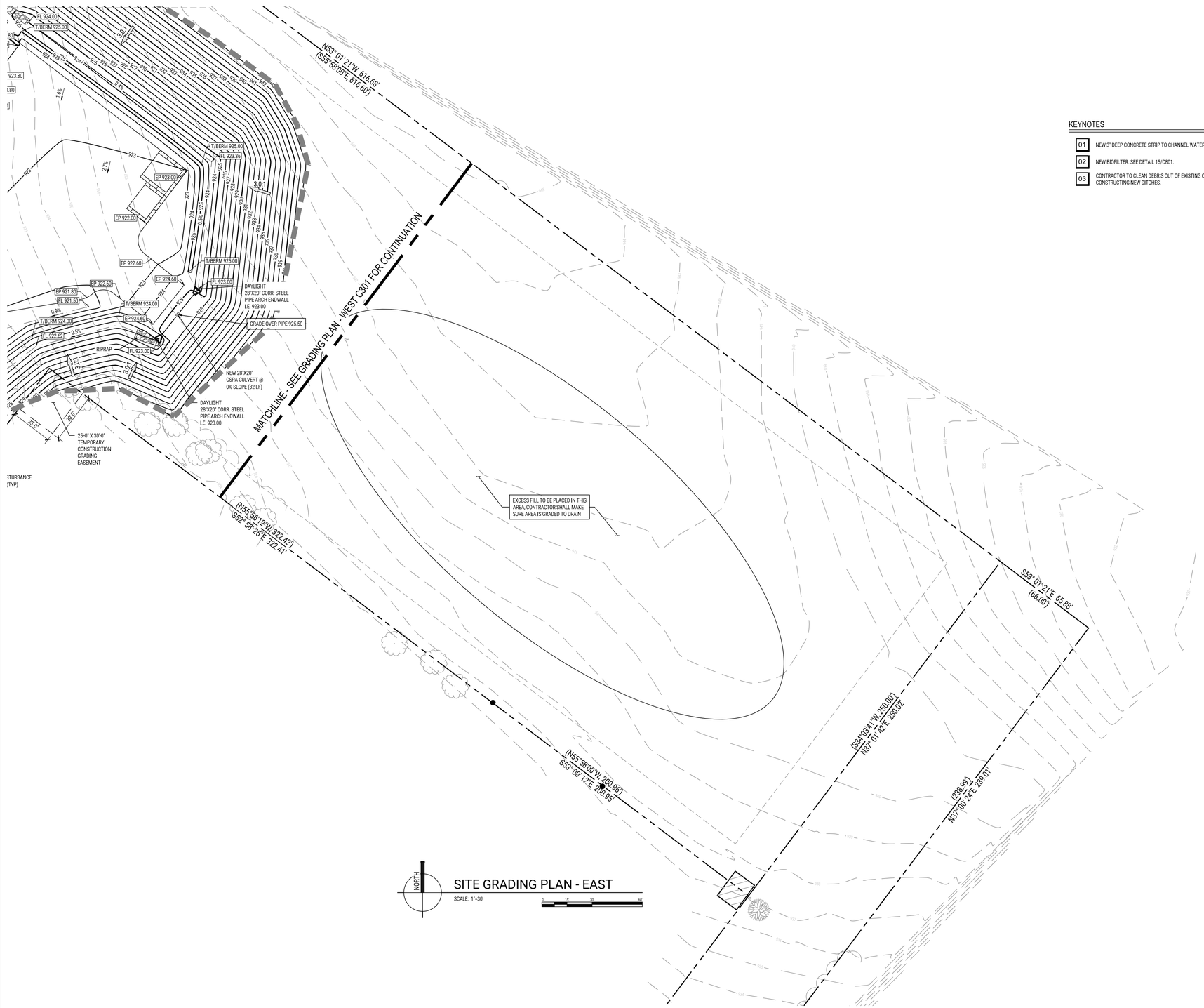

DIGGERS HOTLINE

CALL TOLL FREE 1-800-242-8511
MILWAUKEE AREA 414-259-1181
FAX A LOCATE 1-800-338-3860
TDD (HEARING IMPAIRED) 1-800-542-2289
ONLINE: www.DiggersHotline.com

WISCONSIN STATUE 182.0175 (1974) REQUIRES A MINIMUM OF THREE (3) WORKING DAYS NOTICE PRIOR TO EXCAVATION.

KEYNOTES

01	NEW 3' DEEP CONCRETE STRIP TO CHANNEL WATER ACROSS PAVEMENT. SEE DETAIL 02/C801.
02	NEW BIOFILTER. SEE DETAIL 15/C801.
03	CONTRACTOR TO CLEAN DEBRIS OUT OF EXISTING CULVERT FOR POSITIVE DRAINAGE WHEN CONSTRUCTING NEW DITCHES.

GRADING NOTES

1. CONSTRUCTION FENCING TO BE INSTALLED AROUND ENTIRE CONSTRUCTION SITE. COORDINATE WITH OWNER FOR FENCING AND GATE LOCATIONS AND APPROPRIATE SIGNAGE INSTALLATION.
2. REFER TO OTHER PROJECT PLANS AND INFORMATION RELATED TO THIS PROJECT PRIOR TO BEGINNING ANY GRADING WORK.
3. CONTRACTOR SHALL LOCATE ALL UTILITIES THAT MAY AFFECT THEIR WORK AND NOTIFY OWNER OF ANY POTENTIAL CONFLICTS.
4. CONTRACTOR SHALL VERIFY ALL EXISTING AND PROPOSED ELEVATIONS PRIOR TO START OF CONSTRUCTION. VERIFY CRITICAL ELEVATIONS TO ENSURE CONFORMANCE WITH GRADING PLAN, PARTICULARLY WITH WALK AND/ OR PAVEMENTS TO REMAIN. MEET EXISTING GRADES ALONG STREETS, PROPERTY LINES AND DRIVEWAY ENTRANCES. RESTORE ALL EXISTING PAVEMENTS THAT REMAIN TO THEIR ORIGINAL, IF NOT BETTER CONDITION. NOTIFY OWNER OF ANY CONFLICTS.
5. AREAS NOT PAVED AND TO BE LANDSCAPED SHALL RECEIVE MINIMUM OF 4" DEPTH COMPACTED TOPSOIL.
6. CONTRACTOR SHALL COORDINATE GRADING AND INSTALLATION OF DRIVES IN R.O.W. WITH APPROPRIATE GOVERNMENT AGENCIES. OBTAIN APPROPRIATE PERMITS FOR GRADING AND DRAINAGE IN ALL R.O.W.

SITE SYMBOL LEGEND

	SIGN
	BOLLARD
	FIRE HYDRANT
	MANHOLE/CATCH BASIN/INLET
	CURB INLET
	NEW FLARED END SECTION WITH RIPRAP AND GUARD
EP XXX.XX	NEW EDGE OF PAVEMENT ELEVATION (FEET)
TP XXX.XX	NEW TOP OF PAVEMENT ELEVATION (FEET)
SW XXX.XX	NEW SIDEWALK ELEVATION (FEET)
FG XXX.XX	NEW FINISH GRADE ELEVATION (FEET)
ME XXX.XX	NEW MATCH EX. ELEVATION (FEET)
FL XXX.XX	NEW FLOW LINE ELEVATION (FEET)
FF XXX.XX	NEW FINISHED FLOOR ELEVATION (FEET)
TC XXX.XX BC XXX.XX	NEW TOP AND BOTTOM OF CURB ELEVATION (FEET)
TS XXX.XX BS XXX.XX	NEW TOP AND BOTTOM OF STEP ELEVATION (FEET)
RE / IE XXX.XX	RIM OR INVERT ELEVATION (FEET)
	WATER VALVE OR GAS VALVE
	GAS METER
	LIGHT POLE
	UTILITY POLE
	GUY WIRE
TR	TRANSFORMER
E CT	ELECTRIC METER AND CT CABINET
	NEW STRUCTURE OR ADDITION
	EXISTING STRUCTURE

ALL SYMBOLS MAY NOT BE USED IN THIS SET.

SITE LINE LEGEND

	PROPERTY LINE
	SETBACK LINE
	EASEMENT LINE
XXX	EXISTING INTERMEDIATE CONTOUR
XXX	EXISTING INDEX CONTOUR
XXX	NEW INTERMEDIATE CONTOUR
XXX	NEW INDEX CONTOUR
	PAVEMENT
X X	FENCE
SD SD SD	STORM DRAIN
SS SS	SANITARY SEWER
W W W	WATER
G G G	GAS
P P P	ELECTRICAL POWER
PU PU PU	UNDERGROUND ELECTRICAL POWER
FOU FOU	UNDERGROUND FIBER OPTIC
T T T	TELEPHONE
TU TU TU	UNDERGROUND TELEPHONE
CATV CATV	CABLE
	EDGE OF TREES OR SHRUBS

ALL SYMBOLS MAY NOT BE USED IN THIS SET.

ANGUS-YOUNG
ARCHITECTS/ENGINEERS
Janesville | Madison

ROCK COUNTY

ORFORDVILLE SALT SHED

734 W. BELOIT STREET
ORFORDVILLE, WI 53576

ROCK COUNTY
WISCONSIN

ISSUANCES / REVISIONS		
NO:	DESCRIPTION:	DATE:
01	VILLAGE SITE PLAN SUBMITTAL	09.23.2022
02	VILLAGE SITE PLAN SUBMITTAL	01.13.2023
03	FOR BIDDING	02.01.2023
	---	---
	---	---
	---	---
	---	---
	---	---
	---	---
	---	---
	---	---
	---	---
	---	---
	---	---
	---	---
	---	---

1:09:05 PM 5/13/2023

Due to electronic distribution, this drawing may not be printed to the scale indicated on the drawings. Do NOT use scale to determine dimensions or sizes.

No part of this drawing may be used or reproduced in any form or by any means, or stored in a database or retrieval system, without prior written permission of.

ANGUS - YOUNG ASSOCIATES, INC.
Copyright © 2023 All Rights Reserved

PROJECT NUMBER
74660

APPROVED BY
BTW

REVIEWED BY
KAU

DRAWN BY
MWT

SITE GRADING PLAN - EAST

C302

FILE: X:\74600\cad\74660\C302.dwg mmoser

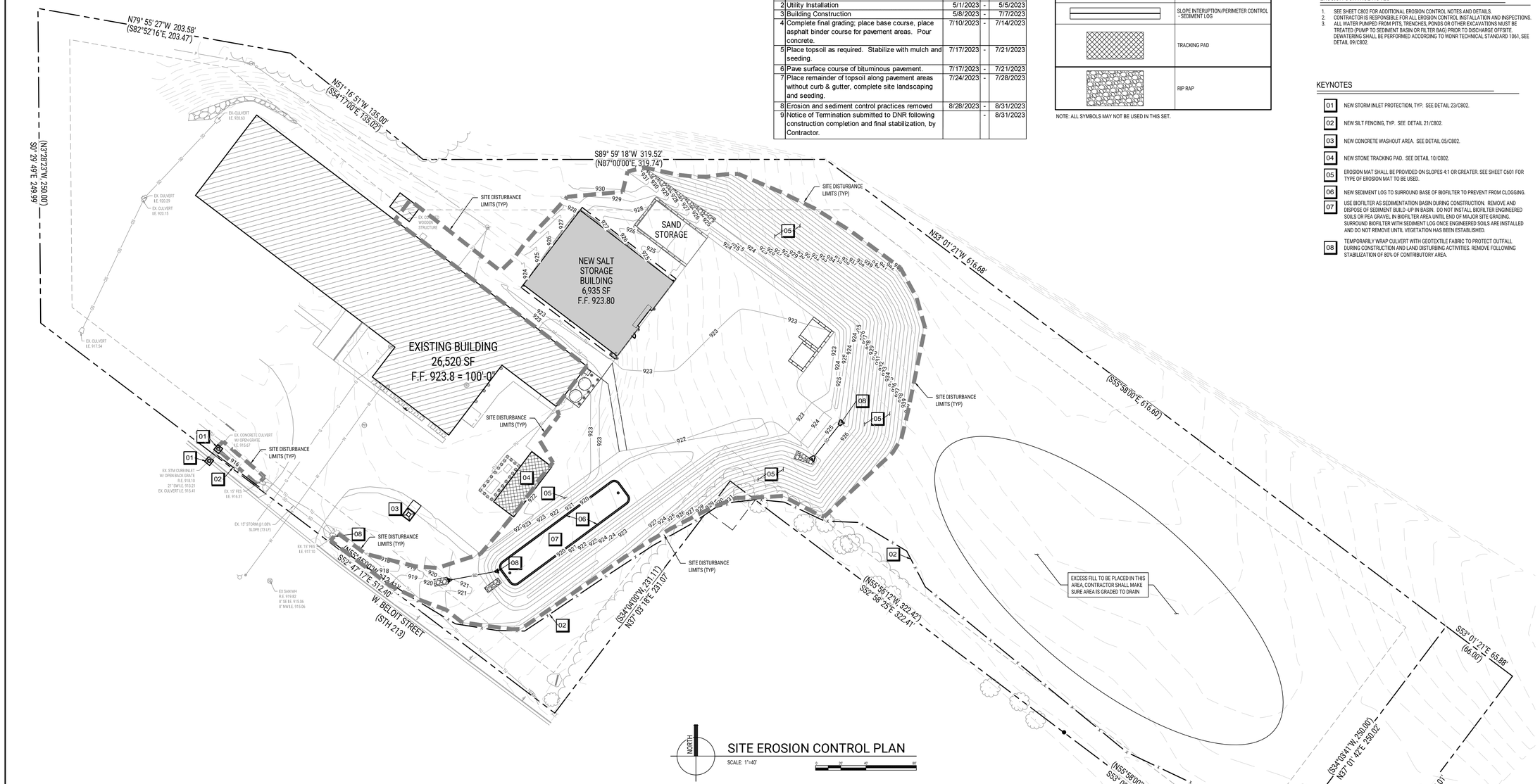

SITE EROSION CONTROL PLAN

CONSTRUCTION ACTIVITY SEQUENCE / ANTICIPATED SCHEDULE

Construction activities are anticipated to begin October 2022. The general sequence of major construction activities is listed below. Adjustments to this sequence may be required due to site conditions, weather conditions, and contractor schedule.

1	Install silt fence and protect inlets and outlets. Install stone tracking pad and aggregate base for pavement. Perform topsoil removal, mass grading operations.	10/17/2022	-	10/28/2022
2	Construct bioretention basin to use as sedimentation basin during constuction.	10/28/2022		11/14/2022
2	Utility Installation	5/1/2023	-	5/5/2023
3	Building Construction	5/8/2023	-	7/7/2023
4	Complete final grading; place base course, place asphalt binder course for pavement areas. Pour concrete.	7/10/2023	-	7/14/2023
5	Place topsoil as required. Stabilize with mulch and seeding.	7/17/2023	-	7/21/2023
6	Pave surface course of bituminous pavement.	7/17/2023	-	7/21/2023
7	Place remainder of topsoil along pavement areas without curb & gutter, complete site landscaping and seeding.	7/24/2023	-	7/28/2023
8	Erosion and sediment control practices removed	8/28/2023	-	8/31/2023
9	Notice of Termination submitted to DNR following construction completion and final stabilization, by Contractor.		-	8/31/2023

EROSION CONTROL LEGEND

x x	SILT FENCING
	INLET PROTECTION
	CONCRETE WASHOUT ZONE
	SLOPE INTERUPTION/PERIMETER CONTROL - SEDIMENT LOG
	TRACKING PAD
	RIP RAP

NOTE: ALL SYMBOLS MAY NOT BE USED IN THIS SET.

DIGGERS HOTLINE

CALL TOLL FREE 1-800-242-8511
MILWAUKEE AREA 414-259-1181
FAX A LOCATE 1-800-338-3860
TDD (HEARING IMPAIRED) 1-800-542-2289
ONLINE: www.DiggersHotline.com

WISCONSIN STATUE 182.0175 (1974) REQUIRES A MINIMUM OF THREE (3) WORKING DAYS NOTICE PRIOR TO EXCAVATION.

EROSION CONTROL NOTES

1. SEE SHEET C802 FOR ADDITIONAL EROSION CONTROL NOTES AND DETAILS.
2. CONTRACTOR IS RESPONSIBLE FOR ALL EROSION CONTROL INSTALLATION AND INSPECTIONS.
3. ALL WATER PUMPED FROM PITS, TRENCHES, PONDS OR OTHER EXCAVATIONS MUST BE TREATED (PUMP TO SEDIMENT BASIN OR FILTER BAG) PRIOR TO DISCHARGE OFFSITE. DEWATERING SHALL BE PERFORMED ACCORDING TO WDNR TECHNICAL STANDARD 1061, SEE DETAIL 09/C802.

KEYNOTES

- 01 NEW STORM INLET PROTECTION, TYP. SEE DETAIL 23/C802.
- 02 NEW SILT FENCING, TYP. SEE DETAIL 21/C802.
- 03 NEW CONCRETE WASHOUT AREA. SEE DETAIL 05/C802.
- 04 NEW STONE TRACKING PAD. SEE DETAIL 10/C802.
- 05 EROSION MAT SHALL BE PROVIDED ON SLOPES 4:1 OR GREATER. SEE SHEET C601 FOR TYPE OF EROSION MAT TO BE USED.
- 06 NEW SEDIMENT LOG TO SURROUND BASE OF BIOFILTER TO PREVENT FROM CLOGGING.
- 07 USE BIOFILTER AS SEDIMENTATION BASIN DURING CONSTRUCTION. REMOVE AND DISPOSE OF SEDIMENT BUILD -UP IN BASIN. DO NOT INSTALL BIOFILTER ENGINEERED SOILS OR PEA GRAVEL IN BIOFILTER AREA UNTIL END OF MAJOR SITE GRADING. SURROUND BIOFILTER WITH SEDIMENT LOG ONCE ENGINEERED SOILS ARE INSTALLED AND DO NOT REMOVE UNTIL VEGETATION HAS BEEN ESTABLISHED.
- 08 TEMPORARILY WRAP CULVERT WITH GEOTEXTILE FABRIC TO PROTECT OUTFALL DURING CONSTRUCTION AND LAND DISTURBING ACTIVITIES. REMOVE FOLLOWING STABILIZATION OF 80% OF CONTRIBUTORY AREA.

ANGUS-YOUNG
ARCHITECTS/ENGINEERS
Janesville | Madison

ROCK COUNTY

ORFORDVILLE SALT SHED

734 W. BELOIT STREET
ORFORDVILLE, WI 53576

ROCK COUNTY
WISCONSIN

ISSUANCES / REVISIONS

NO:	DESCRIPTION:	DATE:
01	VILLAGE SITE PLAN SUBMITTAL	09.23.2022
02	VILLAGE SITE PLAN SUBMITTAL	01.13.2023
03	FOR BIDDING	02.01.2023
	---	---
	---	---
	---	---
	---	---
	---	---
	---	---
	---	---
	---	---
	---	---
	---	---
	---	---
	---	---

1:09:14 PM 1/13/2023

Due to electronic distribution, this drawing may not be printed to the scale indicated on the drawings. Do NOT use scale to determine dimensions or sizes.

No part of this drawing may be used or reproduced in any form or by any means, or stored in a database or retrieval system, without prior written permission of.

ANGUS - YOUNG ASSOCIATES, INC.
Copyright © 2023 All Rights Reserved

PROJECT NUMBER
74660

APPROVED BY
BTW

REVIEWED BY
KAU

DRAWN BY
MWT

SITE EROSION CONTROL PLAN

C303

FILE: X:\74660\cad\74660dwf\C303.dwg mtrosper

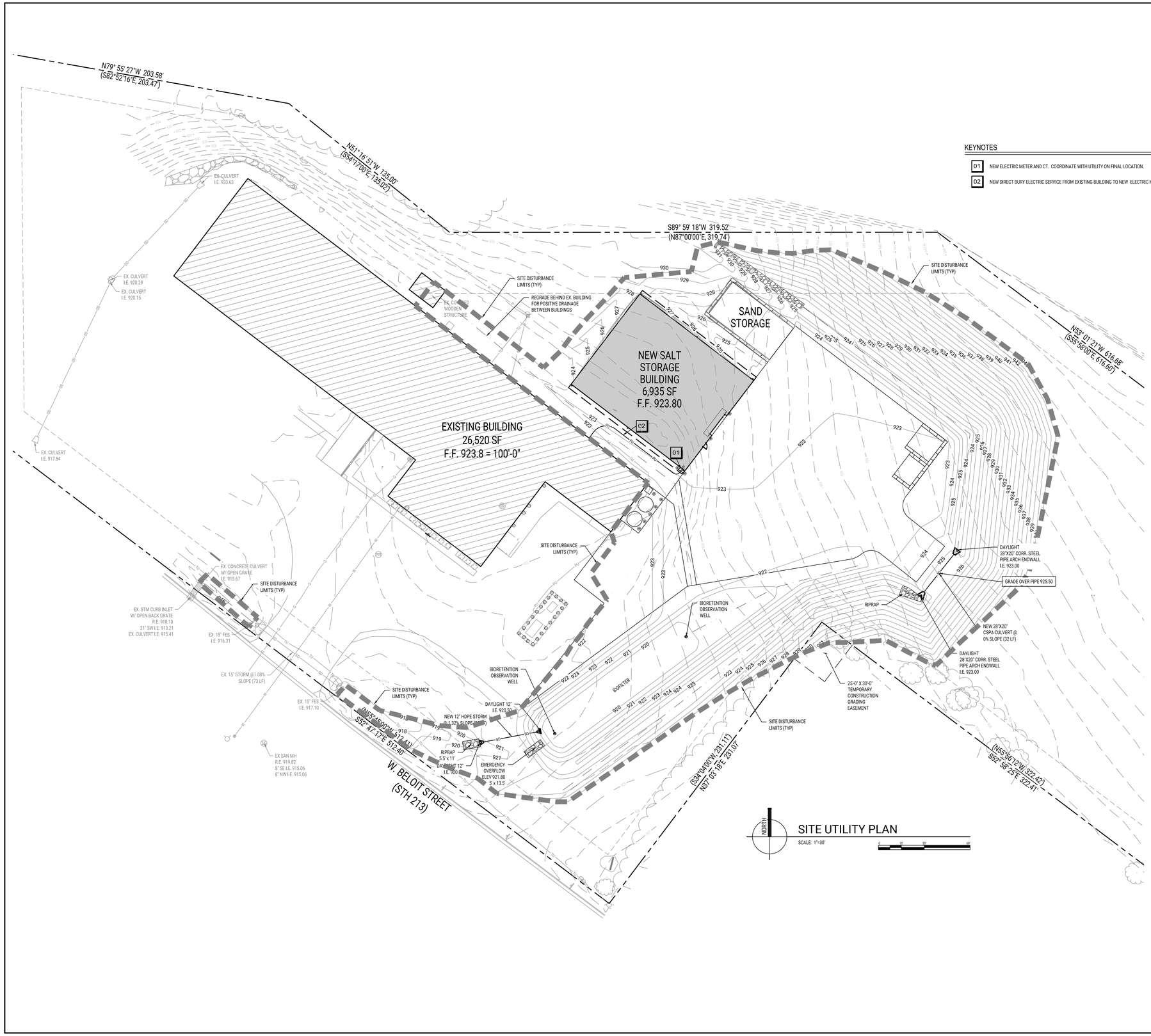

SITE UTILITY PLAN

SCALE: 1"=30'

0 15' 30' 60'

KEYNOTES

01 NEW ELECTRIC METER AND CT. COORDINATE WITH UTILITY ON FINAL LOCATION.

02 NEW DIRECT BURY ELECTRIC SERVICE FROM EXISTING BUILDING TO NEW ELECTRIC METER.

DIGGERS HOTLINE

CALL TOLL FREE 1-800-242-8511
MILWAUKEE AREA 414-259-1181
FAX A LOCATE 1-800-338-3860
TDD (HEARING IMPAIRED) 1-800-542-2289
ONLINE: www.DiggersHotline.com

WISCONSIN STATUE 182.0175 (1974) REQUIRES A MINIMUM OF THREE (3) WORKING DAYS NOTICE PRIOR TO EXCAVATION.

SITE UTILITY PLAN GENERAL NOTES

1. TRUE NORTH MAY VARY FROM PROJECT NORTH.
2. CONSTRUCTION PRACTICES, MEANS AND METHODS, AND JOB SITE SAFETY, SHALL REMAIN THE SOLE RESPONSIBILITY OF THE CONTRACTOR.
3. ALL WORK SHALL BE PERFORMED IN COMPLIANCE WITH THE FEDERAL OCCUPATIONAL HEALTH AND SAFETY ADMINISTRATION (OSHA), AND ALL FEDERAL, STATE AND LOCAL CODES AND ORDINANCES AS THEY PERTAIN TO THIS PROJECT.
4. FIELD VERIFY ALL EXISTING AND PROPOSED UTILITIES, ELEVATIONS AND DIMENSIONS.
5. COORDINATE RELOCATION OF ANY UTILITIES WITH THE UTILITY COMPANIES. NOTIFY THE ELECTRICAL UTILITY OF ANY EXCAVATION ADJACENT TO HIGH VOLTAGE LINES. PROTECT ALL UTILITIES TO REMAIN.
6. DIGGERS HOTLINE SHALL BE CALLED TO MARK UTILITIES PRIOR TO LAND DISTURBANCE.
7. COORDINATE WITH THE AUTHORITY HAVING JURISDICTION AND UTILITY COMPANIES AS NECESSARY.
8. PROVIDE THRUST BLOCKING AND PIPE JOINT RESTRAINT FOR DUCTILE IRON WATER LATERALS. PROVIDE WATER CONNECTIONS AND CONTROL VALVES IN ACCORDANCE WITH STATE AND LOCAL REQUIREMENTS.
9. CONTRACTOR SHALL RESTORE CURB AND GUTTER AND PAVEMENT WORK TO MEET AUTHORITY HAVING JURISDICTION REQUIREMENTS. SAWCUT PAVEMENT TO PROVIDE CLEAN EDGE.
10. TRACER WIRE SHALL BE INSTALLED ABOVE ALL SANITARY, STORM AND WATER LATERALS THAT CONNECT TO A PUBLIC UTILITY. TRACER WIRE SHALL BE A MINIMUM OF 12 GAUGE, PLASTIC-COATED COPPER WIRE BURIED WITHIN 6" AND DIRECTLY ABOVE THE TOP OF THE PIPE. THE TRACER WIRE SHALL BE BROUGHT TO THE SURFACE AT LEAST EVERY 400'. PROTECT THE WIRE AT THE ACCESS POINTS. THE COLOR OF THE TRACER WIRE SHALL BE AS FOLLOWS:
    - GREEN FOR SANITARY SEWER
    - BROWN FOR STORM SEWER
    - BLUE FOR POTABLE WATER
11. PROVIDE TRENCH BEDDING PER DETAIL 08/C801. UTILITY TRENCHES UNDER CONCRETE PAVEMENT SHALL UTILIZE FLOWABLE FILL IN AREAS DIFFICULT TO COMPACT TO PREVENT CONCRETE CRACKING.
12. PROVIDE MIN. 7'-0" COVER OVER WATER LATERAL. SEE GRADING PLAN SHEET FOR EXISTING AND PROPOSED GRADES. COORDINATE AS NECESSARY, PARTICULARLY AROUND STORMWATER FACILITIES. PROVIDE MIN. 18" CLEARANCE UNDER OR 12" CLEARANCE OVER SANITARY AND STORM SEWER PIPES.
13. ALL SANITARY, STORM, AND WATER UTILITY WORK WITHIN PUBLIC RIGHT OF WAY SHALL CONFORM TO AUTHORITY HAVING JURISDICTION REQUIREMENTS AND STANDARD SPECIFICATIONS.
14. RESTORE ALL AREAS TO SEEDED LAWN UNLESS NOTED OTHERWISE.

SITE SYMBOL LEGEND

	SIGN
	BOLLARD
	FIRE HYDRANT
	MANHOLE/CATCH BASIN/INLET
	CURB INLET
	NEW FLARED END SECTION WITH RIPRAP AND GUARD
	WATER VALVE OR GAS VALVE
	GAS METER
	LIGHT POLE
	UTILITY POLE
	GUY WIRE
TR	TRANSFORMER
E CT	ELECTRIC METER AND CT CABINET
	NEW STRUCTURE OR ADDITION
	EXISTING STRUCTURE

ALL SYMBOLS MAY NOT BE USED IN THIS SET.

SITE LINE LEGEND

	PROPERTY LINE
	SETBACK LINE
	EASEMENT LINE
XXX	EXISTING INTERMEDIATE CONTOUR
XXX	EXISTING INDEX CONTOUR
XXX	NEW INTERMEDIATE CONTOUR
XXX	NEW INDEX CONTOUR
	PAVEMENT
X X	FENCE
SD SD SD	STORM DRAIN
SS SS	SANITARY SEWER
W W W	WATER
G G G	GAS
P P P	ELECTRICAL POWER
PU PU PU	UNDERGROUND ELECTRICAL POWER
FOU FOU	UNDERGROUND FIBER OPTIC
T T T	TELEPHONE
TU TU TU	UNDERGROUND TELEPHONE
CATV CATV	CABLE
	EDGE OF TREES OR SHRUBS

ANGUS-YOUNG
ARCHITECTS/ENGINEERS
Janesville | Madison

ROCK COUNTY

ORFORDVILLE SALT SHED

734 W. BELOIT STREET
ORFORDVILLE, WI 53576

ROCK COUNTY
WISCONSIN

ISSUANCES / REVISIONS		
NO:	DESCRIPTION:	DATE:
01	VILLAGE SITE PLAN SUBMITTAL	09.23.2022
02	VILLAGE SITE PLAN SUBMITTAL	01.13.2023
03	FOR BIDDING	02.01.2023
	---	---
	---	---
	---	---
	---	---
	---	---
	---	---
	---	---
	---	---
	---	---
	---	---
	---	---
	---	---
	---	---

1:09:20 PM 1/13/2023

Due to electronic distribution, this drawing may not be printed to the scale indicated on the drawings. Do NOT use scale to determine dimensions or sizes.

No part of this drawing may be used or reproduced in any form or by any means, or stored in a database or retrieval system, without prior written permission of.

ANGUS - YOUNG ASSOCIATES, INC.
Copyright © 2023 All Rights Reserved

PROJECT NUMBER
74660

APPROVED BY
BTW

REVIEWED BY
KAU

DRAWN BY
MWT

SITE UTILITY PLAN

C401

FILE: X:\74660\cad\74660xC401.dwg PRTPDF

KEYNOTES

01 20 KITS OF RAINWATER RENEWAL GARDEN FOR SUNNY SITES (64 PLANTS X 6 KITS = 1280 PLANTS) AND 16 PLANTS OF ASCLEPIAS INCARNATA AND 32 PLANTS OF CAREX VULPINOIDEA) BY AGRECOL OR APPROVED EQUAL. PLANTED IN DRIFTS.

LANDSCAPE PLANT LEGEND

SYMBOL	BOTANICAL NAME	COMMON NAME	INSTALLED SIZE	ROOT	MATURE SIZE	QTY
SHRUBS:						
JC	*Juniperus chinensis 'Fairview'*	Fairview Upright Juniper	4' High	B.B.	15' H x 6-7' W	11

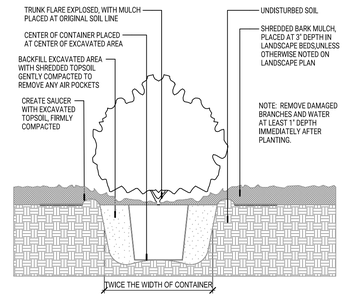

02 C601 CONTAINER PLANTING IN LANDSCAPE BED

SCALE: 1"=1'-0"

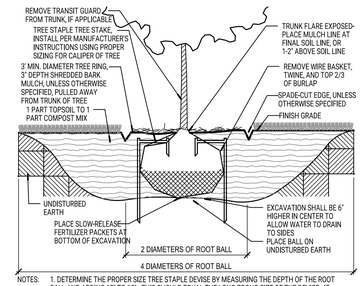

NOTES:
1. DETERMINE THE PROPER SIZE TREE STAPLE DEVISE BY MEASURING THE DEPTH OF THE ROOT BALL AND ADDING 12" TO 18". THIS SHOULD EQUAL THE LONG PRONG SIZE OF THE DEVISE. IF NECESSARY, ROUND UP TO THE NEXT SIZE.
2. IN EXTREME WIND AND/OR LOOSE SOIL CONDITIONS, USE THREE TREE STAPLE DEVICES PER TREE AND/OR ROUND UP TO THE NEXT SIZE.

01 C601 B.B. SHRUB AND TREE PLANTING DETAIL

SCALE: NONE

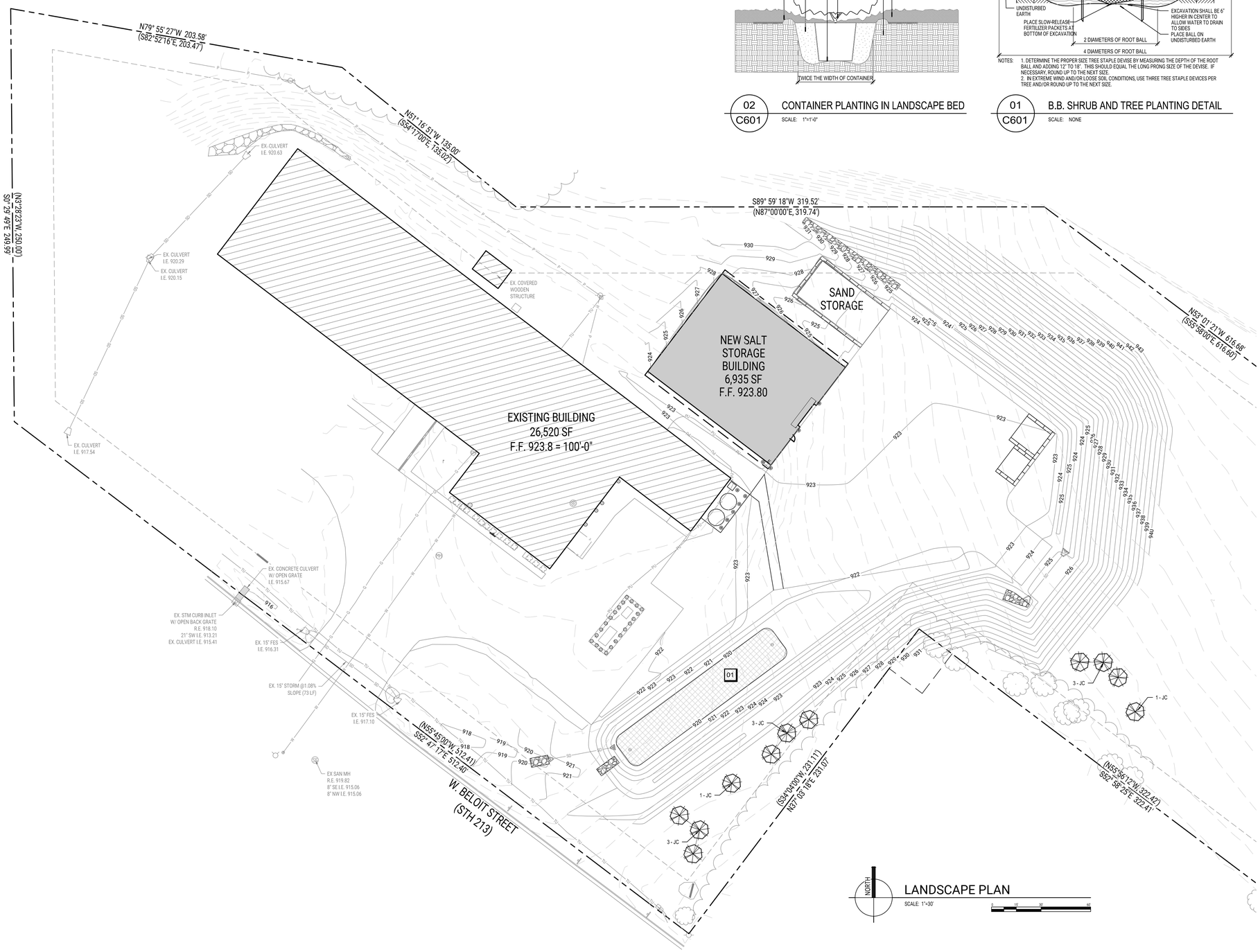

LANDSCAPE PLAN

SCALE: 1"=30'

LANDSCAPE SYMBOL LEGEND

	SHADE TREE
	ORNAMENTAL TREE
	EVERGREEN SHRUB OR TREE
	DECIDUOUS SHRUB
	ORNAMENTAL GRASS
	PERENNIAL
	EXISTING VEGETATION
	EXISTING EVERGREEN

NOTE: ALL SYMBOLS MAY NOT BE USED IN THIS SET.

DIGGERS HOTLINE

CALL TOLL FREE 1-800-242-8511
MILWAUKEE AREA 414-259-1181
FAX A LOCATE 1-800-338-3860
TDD (HEARING IMPAIRED) 1-800-542-2289
ONLINE: www.DiggersHotline.com

WISCONSIN STATUE 182.0175 (1974) REQUIRES A MINIMUM OF THREE (3) WORKING DAYS NOTICE PRIOR TO EXCAVATION.

LANDSCAPE GENERAL NOTES

1. TRUE NORTH MAY VARY FROM PROJECT NORTH.
2. CONSTRUCTION PRACTICES, MEANS AND METHODS, AND JOB SITE SAFETY, SHALL REMAIN THE SOLE RESPONSIBILITY OF THE CONTRACTOR.
3. FIELD VERIFY ALL EXISTING AND PROPOSED UTILITIES, ELEVATIONS AND DIMENSIONS.
4. DIGGERS HOTLINE SHALL BE CALLED TO MARK UTILITIES PRIOR TO LAND DISTURBANCE.
5. RESTORE ALL AREAS TO SEEDED LAWN UNLESS NOTED OTHERWISE.
6. ALL PLANTING BEDS SHALL RECEIVE 3" THICK SHREDDED BARK WITH HEAVY DUTY BLACK PLASTIC EDGING (UNLESS OTHERWISE NOTED.
7. ALL INDIVIDUAL TREES SHALL RECEIVE 4'-0" DIAMETER, 3" THICK SHREDDED BARK MULCH TREE RING WITH SPADE CUT EDGE. MULCH SHALL BE PULLED AWAY FROM TRUNK OF TREE TO PREVENT ROT.
8. ALL LAWN TO BE RESTORED WITH SEED AND EROSION MAT OR HYDROMULCH UNLESS NOTED OTHERWISE. WISDOT URBAN TYPE B EROSION MAT SHALL BE PROVIDED ON SLOPES 4:1 OR GREATER.
9. IN THE EVENT THAT QUANTITY DISCREPANCIES OR MATERIAL OMISSIONS OCCUR IN THE PLANT MATERIALS LIST, THE PLANTING PLANS SHALL GOVERN.
10. SEE DETAILS 01/C601 & 02/C601 FOR PLANTING DETAILS.
11. BIORETENTION DEVICES SHALL RECEIVE CLASS II EROSION MAT (COCONUT MAT ERONET C125 OR EQUIVALENT) WITH BLACK ANODIZED ALUMINUM EDGING. MAT SHALL BE INSTALLED WITH OVERLAPPED JOINTS AND STAKED WITH HARDWOOD STAKES MIN. 6" LONG PRIOR TO INSTALLATION OF PLANTS TO PREVENT COMPACTION.

ANGUS-YOUNG
ARCHITECTS/ENGINEERS
Janesville | Madison

ROCK COUNTY

ORFORDVILLE SALT SHED

734 W. BELOIT STREET
ORFORDVILLE, WI 53576

ROCK COUNTY WISCONSIN

ISSUANCES / REVISIONS		
NO:	DESCRIPTION:	DATE:
01	VILLAGE SITE PLAN SUBMITTAL	09.23.2022
02	VILLAGE SITE PLAN SUBMITTAL	01.13.2023
03	FOR BIDDING	02.01.2023
	---	---
	---	---
	---	---
	---	---
	---	---
	---	---
	---	---
	---	---
	---	---
	---	---
	---	---
	---	---
	---	---

1:09:29 PM 1/13/2023

Due to electronic distribution, this drawing may not be printed to the scale indicated on the drawings. Do NOT use scale to determine dimensions or sizes.

No part of this drawing may be used or reproduced in any form or by any means, or stored in a database or retrieval system, without prior written permission of.

ANGUS - YOUNG ASSOCIATES, INC.
Copyright © 2023 All Rights Reserved

PROJECT NUMBER
74660

APPROVED BY
BTW

REVIEWED BY
KAU

DRAWN BY
MWT

LANDSCAPE PLAN

C601

FILE: X:\74600\sub\74600sDC001.dwg mtrapar

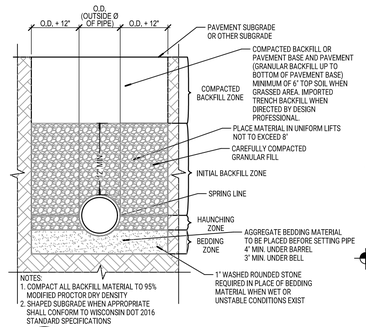

NOTES:
1. COMPACT ALL BACKFILL MATERIAL TO 95% MODIFIED PROCTOR DRY DENSITY
2. SHAPED SUBGRADE WHEN APPROPRIATE SHALL CONFORM TO WISCONSIN DOT 2016 STANDARD SPECIFICATIONS

08 / C801 STANDARD TRENCH SECTION

SCALE: NONE

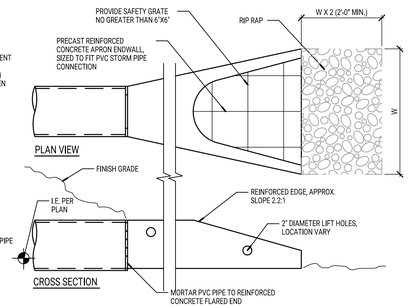

04 / C801 FLARED PIPE SECTION

SCALE: NONE

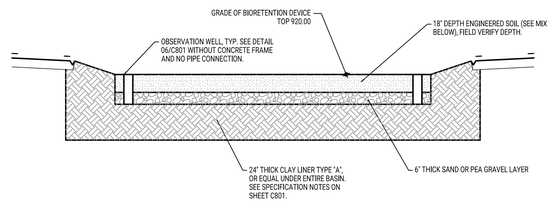

NOTES:
1. SAND SHALL MEET STANDARDS FOR FINE AGGREGATE CONCRETE SAND IN THE WISCONSIN STANDARDS AND SPECIFICATIONS FOR HIGHWAY CONSTRUCTION, SECTION 501.2.5.3.4, 2005 EDITION, OR APPROVED EQUAL. SAND SHALL CONSIST OF AT LEAST 97% SiO2. SUBSTITUTIONS ARE NOT ALLOWED. SAND SHALL BE WASHED PRIOR TO MIXING.
2. COMPOST SHALL MEET THE REQUIREMENTS OF THE WISCONSIN DNR SPECIFICATION S100, COMPOST.
3. THE ENGINEERED SOIL SHALL BE UNIFORM, FREE OF STONES, STUMPS, ROOTS, OR OTHER SIMILAR OBJECTS LARGER THAN 1" IN DIAMETER.
4. THE ENGINEERED SOIL MIX SHALL HAVE A pH BETWEEN 5.5 AND 6.5
5. THE ENGINEERED SOIL MIX SHALL BE PLACED IN 6" LIFTS. DEPTH OF SOIL SHALL ACCOMMODATE COMPACTION.

ENGINEERED SOIL MIX:

ENGINEERED SOIL COMPONENT	% COMPOSITION (BY VOLUME)
MINERAL (SiO2) SAND	70%
COMPOST	30%

15 / C801 BIORETENTION DEVICE SECTION

SCALE: NONE

BIOFILTER NOTES

A. BIOFILTERS SHALL BE INSTALLED WITH A 'TYPE A' LINER IN ACCORDANCE WITH DNR CONSERVATION PRACTICE STANDARD 1001 'WET DETENTION POND' APPENDIX D. 'TYPE A' LINER SHALL BE EITHER (1) CLAY, (2) HIGH DENSITY POLYETHYLENE (HDPE) OR (3) GEOSYNTHETIC CLAY LINER (GCL).

1. CLAY LINER CRITERIA (ESSENTIALLY THE SAME AS THE CLAY BELOW LANDFILLS BUT NOT AS THICK):
   a. 50% FINES (200 SIEVE) OR MORE.
   b. AN IN-PLACE HYDRAULIC CONDUCTIVITY OF 1 X 10 -7 CM./SEC. OR LESS.
   c. AVERAGE LIQUID LIMIT OF 25 OR GREATER, WITH NO VALUE LESS THAN 20.
   d. AVERAGE PI OF 12 OR MORE, WITH NO VALUES LESS THAN 10.
   e. CLAY INSTALLED WET OF OPTIMUM IF USING STANDARD PROCTOR, AND 2% WET OF OPTIMUM IF USING MODIFIED PROCTOR.
   f. CLAY COMPACTION AND DOCUMENTATION AS SPECIFIED IN NRCS WISCONSIN CONSTRUCTION SPECIFICATION 202, CLAY LINERS.
   g. MINIMUM THICKNESS OF TWO FEET.
   h. SPECIFY METHOD FOR KEEPING THE POOL FULL OR USE OF COMPOSITE SOILS BELOW LINER.
2. HDPE LINER CRITERIA:
   a. MINIMUM THICKNESS SHALL BE 60 MILS.
   b. DESIGN ACCORDING TO THE CRITERIA IN TABLE 3 OF THE NRCS 313, WASTE STORAGE FACILITY TECHNICAL STANDARD.
   c. INSTALL ACCORDING TO NRCS WISCONSIN CONSTRUCTION SPECIFICATION 202, POLYETHYLENE GEOMEMBRANE LINING.
3. GCL LINER CRITERIA:
   a. DESIGN ACCORDING TO THE CRITERIA IN TABLE 4 OF NRCS 313, WASTE STORAGE FACILITY TECHNICAL STANDARD.
   b. INSTALL ACCORDING TO NRCS WISCONSIN CONSTRUCTION SPECIFICATION 203, GEOSYNTHETIC CLAY LINER.

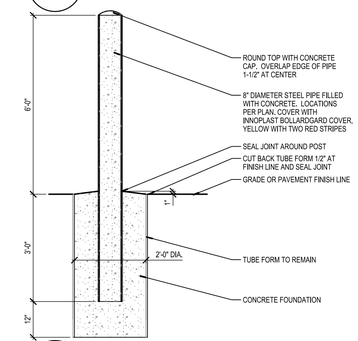

03 / C801 TYPICAL EXTERIOR 8" BOLLARD

SCALE: 1/2"=1'-0"

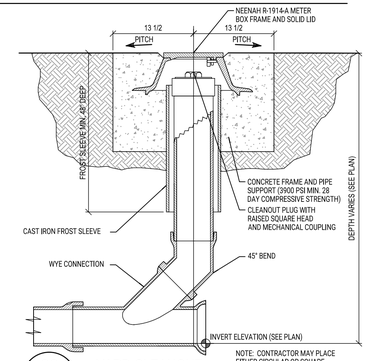

NOTE: CONTRACTOR MAY PLACE EITHER CIRCULAR OR SQUARE CONCRETE FRAME AND PIPE SUPPORT.

06 / C801 YARD CLEANOUT

SCALE: NONE

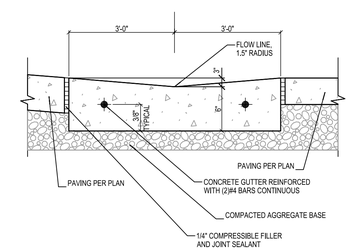

02 / C801 PAVEMENT GUTTER SECTION

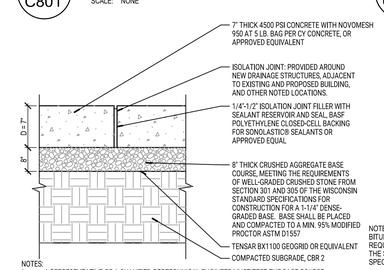

NOTES:
1. A REPRESENTATIVE OF A QUALIFIED GEOTECHNICAL ENGINEER MUST TEST THE BASE COURSE MATERIAL PRIOR TO AND DURING PLACEMENT, IN ACCORDANCE WITH THE GEOTECHNICAL REPORT.

05 / C801 CONCRETE PAVEMENT ISOLATION JOINT

SCALE: 1"=1'-0"

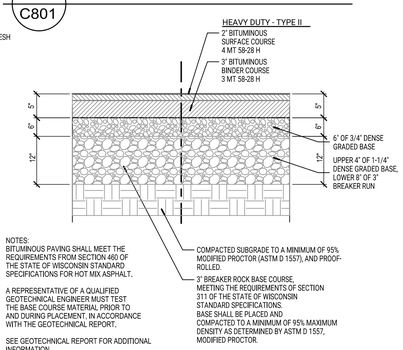

NOTES:
BITUMINOUS PAVING SHALL MEET THE REQUIREMENTS FROM SECTION 460 OF THE STATE OF WISCONSIN STANDARD SPECIFICATIONS FOR HOT MIX ASPHALT.

A REPRESENTATIVE OF A QUALIFIED GEOTECHNICAL ENGINEER MUST TEST THE BASE COURSE MATERIAL PRIOR TO AND DURING PLACEMENT, IN ACCORDANCE WITH THE GEOTECHNICAL REPORT.

SEE GEOTECHNICAL REPORT FOR ADDITIONAL INFORMATION.

01 / C801 BITUMINOUS PAVING DETAIL

SCALE: NOT TO SCALE

FILE: X:\74660\cad\74660xC801.dwg intrusar

ANGUS-YOUNG
ARCHITECTS/ENGINEERS
Janesville | Madison

ROCK COUNTY

ORFORDVILLE SALT SHED

734 W. BELOIT STREET
ORFORDVILLE, WI 53576

ROCK COUNTY
WISCONSIN

ISSUANCES / REVISIONS

NO:	DESCRIPTION:	DATE:
01	VILLAGE SITE PLAN SUBMITTAL	09.23.2022
02	VILLAGE SITE PLAN SUBMITTAL	01.13.2023
03	FOR BIDDING	02.01.2023
	---	---
	---	---
	---	---
	---	---
	---	---
	---	---
	---	---
	---	---
	---	---
	---	---
	---	---
	---	---
	---	---
	---	---

1:09:37 PM 1/13/2023

Due to electronic distribution, this drawing may not be printed to the scale indicated on the drawings. Do NOT use scale to determine dimensions or sizes.

No part of this drawing may be used or reproduced in any form or by any means, or stored in a database or retrieval system, without prior written permission of.

ANGUS - YOUNG ASSOCIATES, INC.
Copyright © 2023 All Rights Reserved

PROJECT NUMBER
74660

APPROVED BY
BTW

REVIEWED BY
KAU

DRAWN BY
MWT

SITE DETAILS

C801

SDD 08E10 Inlet Protection, Types A, B, C and D

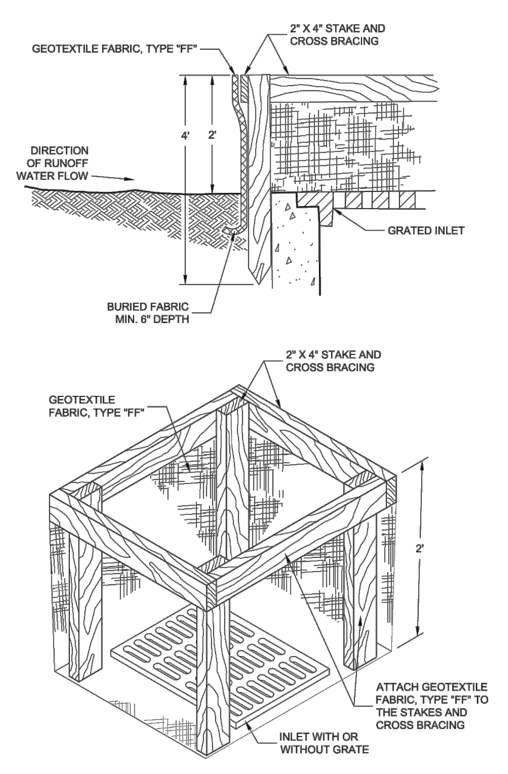

INLET PROTECTION, TYPE "A"

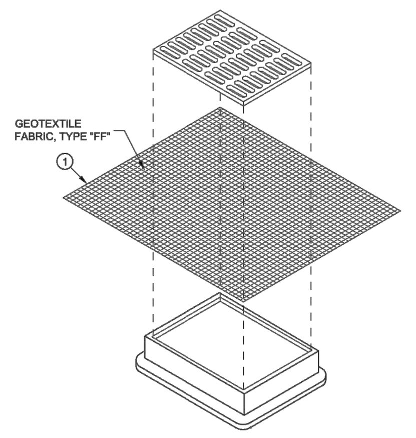

INLET PROTECTION, TYPE "B" (WITHOUT CURB BOX)

(CAN BE INSTALLED IN ANY INLET WITHOUT A CURB BOX)

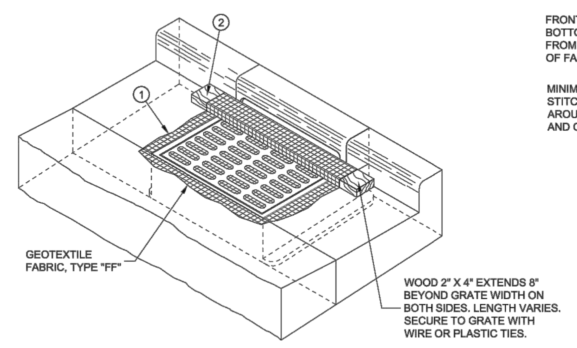

INLET PROTECTION, TYPE "C" (WITH CURB BOX)

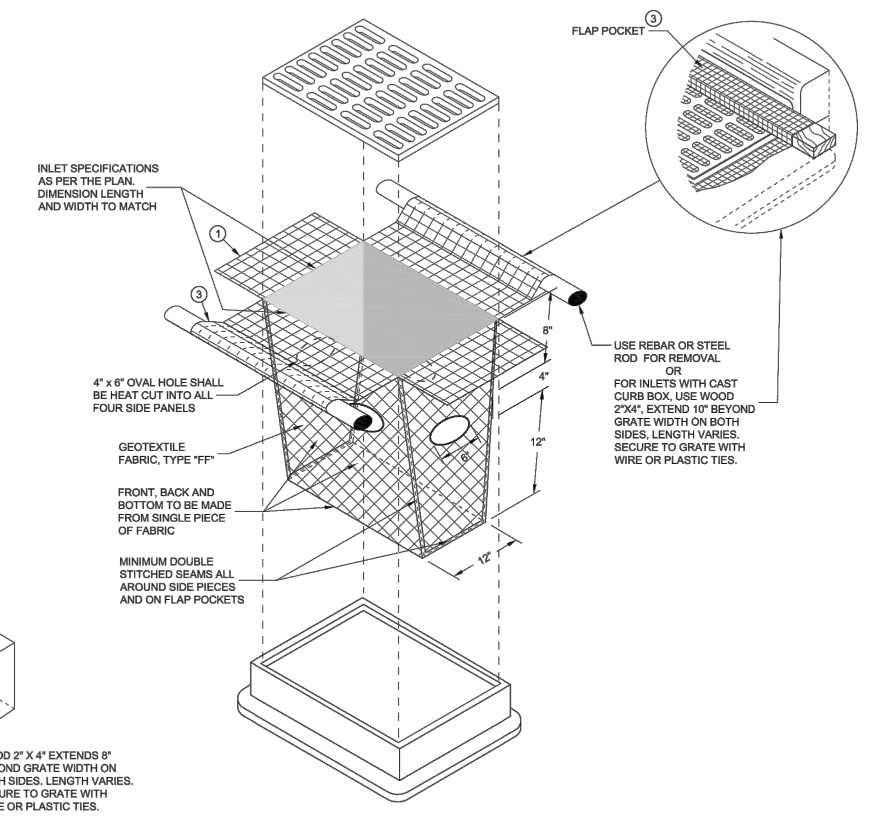

INLET PROTECTION, TYPE "D"

(CAN BE INSTALLED IN ANY INLET WITH OR WITHOUTA CURB BOX AS PER NOTE (2))

GENERAL NOTES

INLET PROTECTION DEVICES SHALL BE MAINTAINED OR REPLACED AT THE DIRECTION OF THE ENGINEER.

MANUFACTURED ALTERNATIVES APPROVED AND LISTED ON THE DEPARTMENT'S EROSION CONTROL PRODUCT ACCEPTABILITY LIST MAY BE SUBSTITUTED.

WHEN REMOVING OR MAINTAINING INLET PROTECTION, CARE SHALL BE TAKEN SO THAT THE SEDIMENT TRAPPED ON THE GEOTEXTILE FABRIC DOES NOT FALL INTO THE INLET. ANY MATERIAL FALLING INTO THE INLET SHALL BE REMOVED IMMEDIATELY.

(1) FINISHED SIZE, INCLUDING FLAP POCKETS WHERE REQUIRED, SHALL EXTEND A MINIMUM OF 10" AROUND THE PERIMETER TO FACILITATE MAINTENANCE OR REMOVAL.

(2) FOR INLET PROTECTION, TYPE C (WITH CURB BOX), AN ADDITIONAL 18" OF FABRIC IS WRAPPED AROUND THE WOOD AND SECURED WITH STAPLES. THE WOOD SHALL NOT BLOCK THE ENTIRE HEIGHT OF THE CURB BOX OPENING.

(3) FLAP POCKETS SHALL BE LARGE ENOUGH TO ACCEPT WOOD 2X4.

INSTALLATION NOTES

TYPES B & C

TRIM EXCESS FABRIC IN THE FLOW LINE TO WITHIN 3" OF THE GRATE.

THE CONTRACTOR SHALL DEMONSTRATE A METHOD OF MAINTENANCE, USING A SEWN FLAP, HAND HOLDS OR OTHER METHOD TO PREVENT ACCUMULATED SEDIMENT FROM ENTERING THE INLET.

TYPE D

TRIM EXCESS FABRIC IN THE FLOW LINE TO WITHIN 3" OF THE GRATE.

DO NOT INSTALL INLET PROTECTION TYPE D IN INLETS SHALLOWER THAN 30", MEASURED FROM THE BOTTOM OF THE INLET TO THE TOP OF THE GRATE.

THE INSTALLED BAG SHALL HAVE A MINIMUM SIDE CLEARANCE, BETWEEN THE INLET WALLS AND THE BAG, MEASURED AT THE BOTTOM OF THE OVERFLOW HOLES, OF 3". WHERE NECESSARY THE CONTRACTOR SHALL CINCH THE BAG, USING PLASTIC ZIP TIES, TO ACHIEVE THE 3" CLEARANCE. THE TIES SHALL BE PLACED AT A MAXIMUM OF 4" FROM THE BOTTOM OF THE BAG.

INLET PROTECTION TYPES A, B, C AND D

STATE OF WISCONSIN DEPARTMENT OF TRANSPORTATION

APPROVED 10/16/02 DATE — /S/ Beth Cannestra, ROADWAY STANDARDS DEVELOPMENT ENGINEER — FHWA

SDD 08E10 - 02 — 6

23 / C802 STORM DRAIN INLET PROTECTION

SCALE: 1/2"=1'-0"

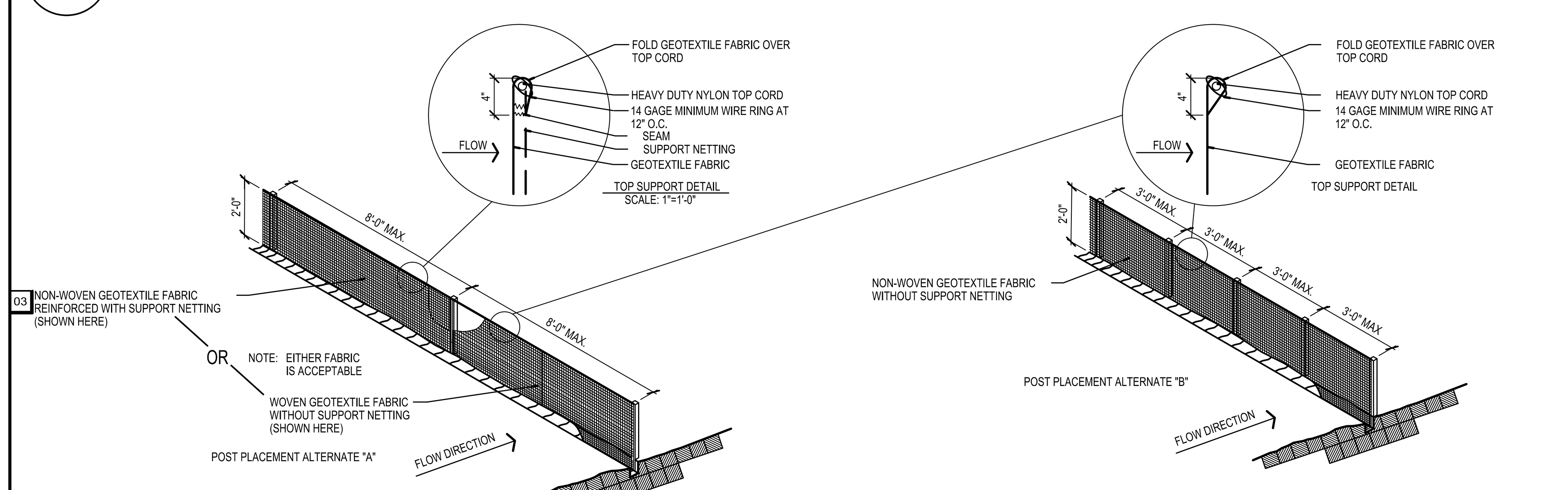

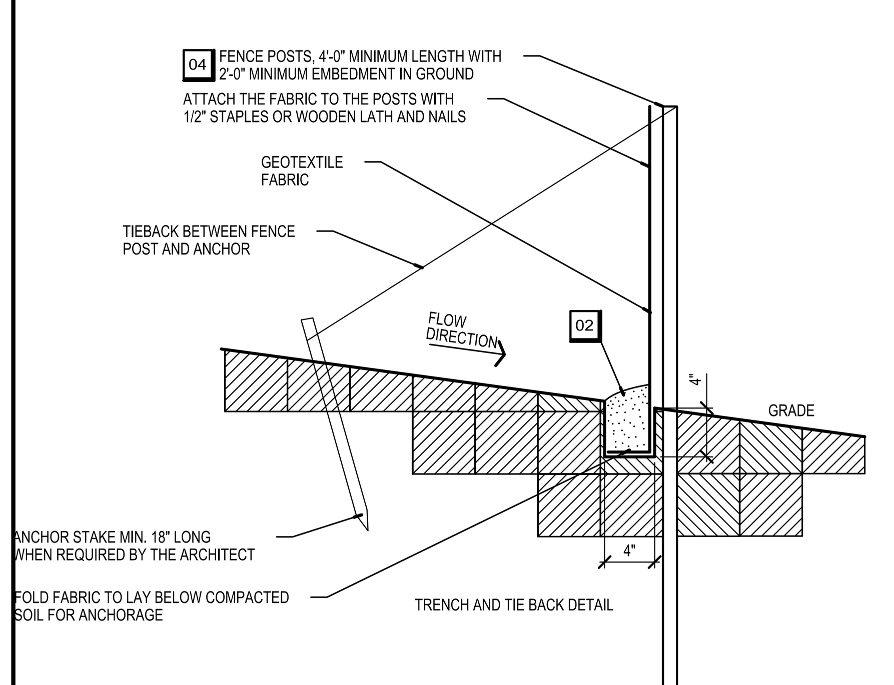

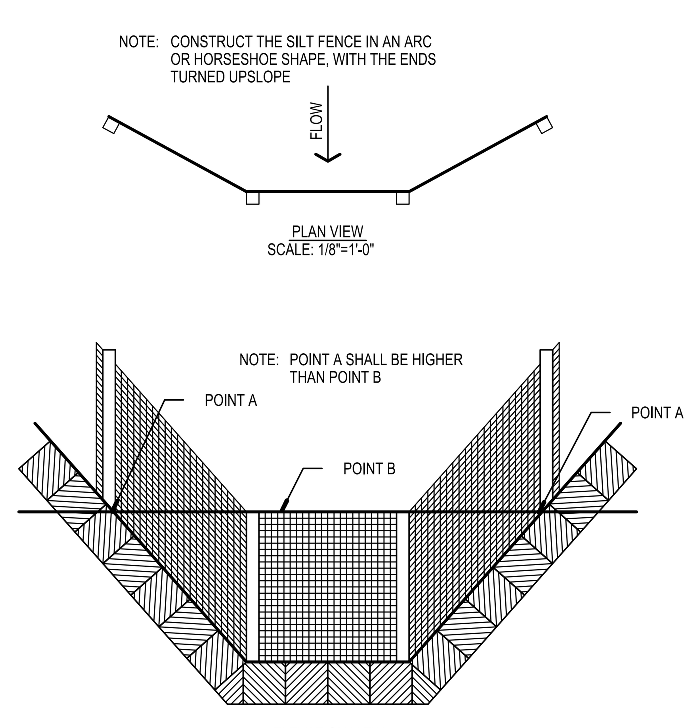

GENERAL NOTES:

1. CONSTRUCTION SHALL CONFORM TO THE PERTINENT REQUIREMENTS OF THE STANDARD SPECIFICATIONS, THE WISCONSIN CONSTRUCTION SITE BEST MANAGEMENT PRACTICE HANDBOOK, AND ANY APPLICABLE SPECIAL PROVISIONS.
2. ALTERNATES A & B ARE EQUAL AND EITHER MAY BE USED.
3. INSTALL SILT FENCING PRIOR TO DISTURBING UP SLOPE AREAS.
4. REMOVE FENCING WHEN SOIL HAS BEEN PERMANENTLY STABILIZED.

KEYNOTES:

- 01 CROSS BRACE WITH 2" X 4" WOODEN FRAME OR EQUIVALENT AT TOP OF POSTS AS DIRECTED BY THE ARCHITECT.
- 02 EXCAVATE A 4" WIDE x 4" DEEP TRENCH ALONG INTENDED FENCE LINE TO BURY AND ANCHOR THE GEOTEXTILE FABRIC. FOLD FABRIC TO FIT TRENCH AND BACKFILL & COMPACT TRENCH WITH EXCAVATED SOIL.
- 03 GEOTEXTILE FABRIC SHALL BE REINFORCED WITH AN INDUSTRIAL POLYPROPYLENE NETTING WITH A MAXIMUM MESH SPACING OF 3/4" OR EQUIVALENT.
- 04 FENCE POSTS SHALL BE AS FOLLOWS:
  - STEEL: STUDDED "TEE" OR "U" TYPE WITH A MINIMUM WEIGHT OF 1.28 LBS/LINEAL FOOT WITH FIN ANCHORS SUFFICIENT TO RESIST POST MOVEMENT
  - WOOD: 1-1/8" x 1-1/8" OAK OR HICKORY OR 4" DIAMETER ROUND PRESSURE TREATED OR 1-1/2" x 3-1/2" PRESSURE TREATED WITH STRONG DIRECTION ORIENTED WITH THE SLOPE

MAINTENANCE:

- MAINTAIN AND INSPECT FENCE WITHIN 24 HOURS AFTER EACH RAINFALL OR DAILY DURING PROLONGED RAINFALL.
- REMOVE SEDIMENT DEPOSITS AFTER EACH STORM EVENT OR WHEN DEPOSITS REACH 1/2 FENCE HEIGHT, WHICHEVER OCCURS FIRST.
- REPAIR OR REPLACE FENCE WHEN TORN, SAGGING, OVERTOPPED, BLOWN OVER(LAYING DOWN), SHOWS A LACK OF MATERIAL INTEGRITY, OR IN ANY WAY IS NOT FUNCTIONING AS DESIGNED.

21 / C802 OVERLAND FLOW SILT FENCE DETAILS

SCALE: NOT TO SCALE

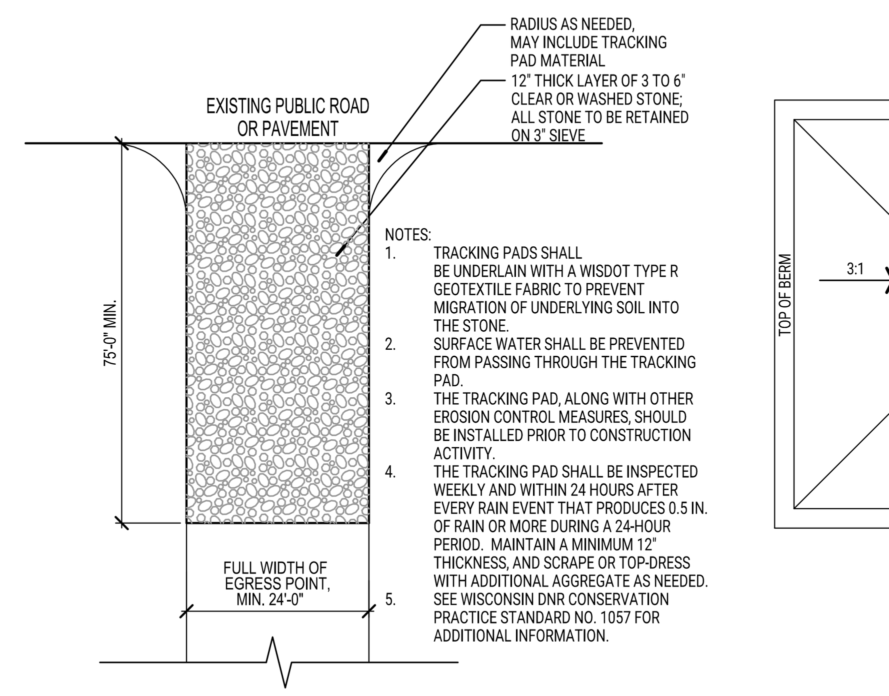

NOTES:

1. TRACKING PADS SHALL BE UNDERLAIN WITH A WISDOT TYPE R GEOTEXTILE FABRIC TO PREVENT MIGRATION OF UNDERLYING SOIL INTO THE STONE.
2. SURFACE WATER SHALL BE PREVENTED FROM PASSING THROUGH THE TRACKING PAD.
3. THE TRACKING PAD, ALONG WITH OTHER EROSION CONTROL MEASURES, SHOULD BE INSTALLED PRIOR TO CONSTRUCTION ACTIVITY.
4. THE TRACKING PAD SHALL BE INSPECTED WEEKLY AND WITHIN 24 HOURS AFTER EVERY RAIN EVENT THAT PRODUCES 0.5 IN. OF RAIN OR MORE DURING A 24-HOUR PERIOD. MAINTAIN A MINIMUM 12" THICKNESS, AND SCRAPE OR TOP-DRESS WITH ADDITIONAL AGGREGATE AS NEEDED.
5. SEE WISCONSIN DNR CONSERVATION PRACTICE STANDARD NO. 1057 FOR ADDITIONAL INFORMATION.

10 / C802 STONE TRACKING PAD DETAIL

SCALE: 1"=20'-0"

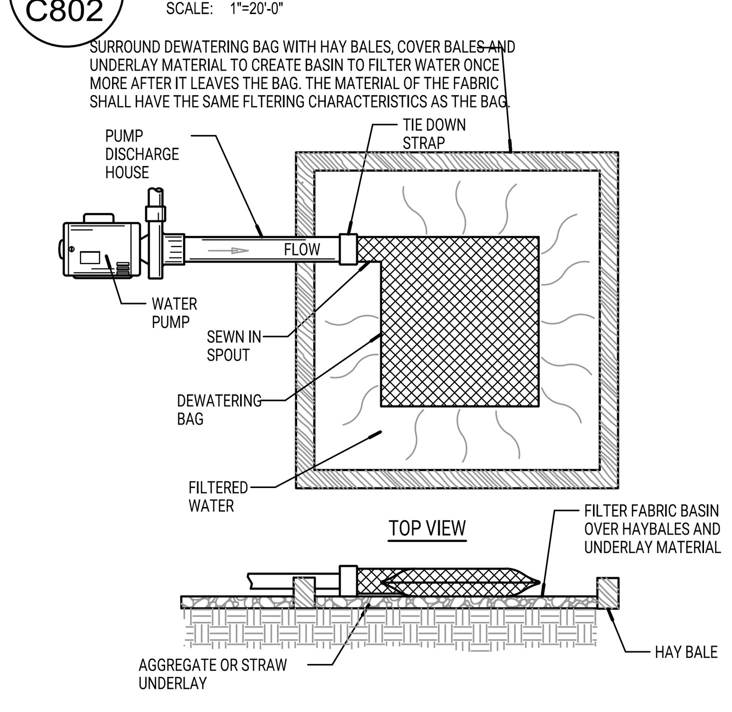

09 / C802 DEWATERING DETAIL

SCALE: NOT TO SCALE

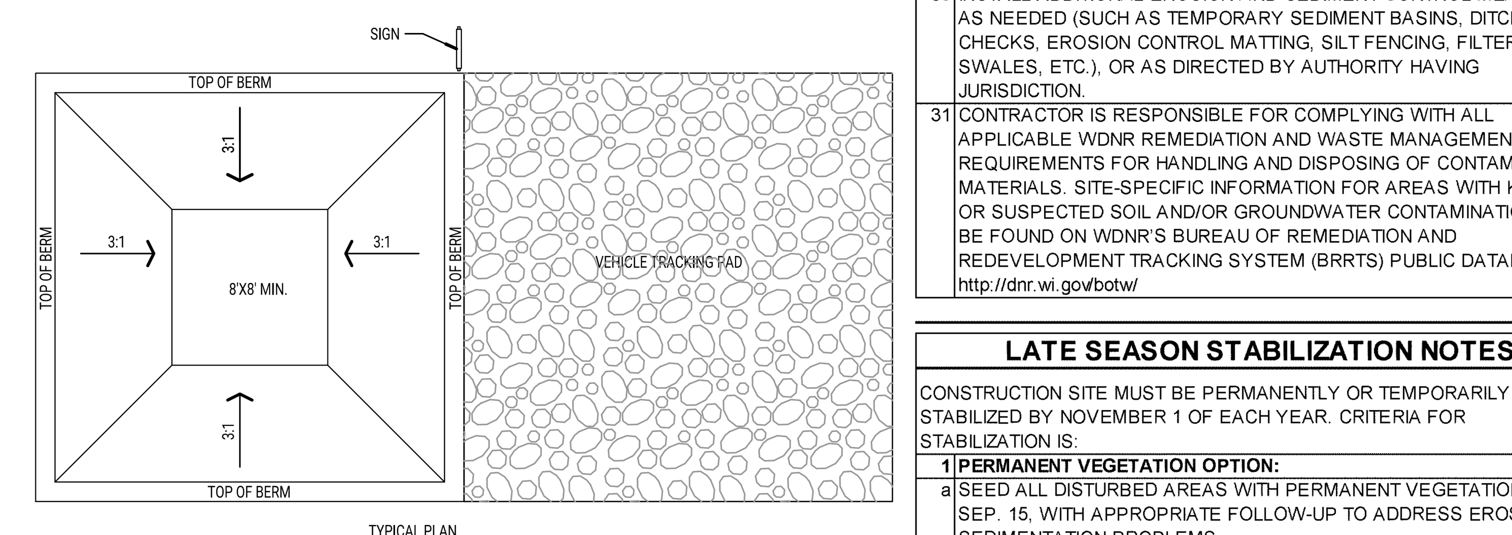

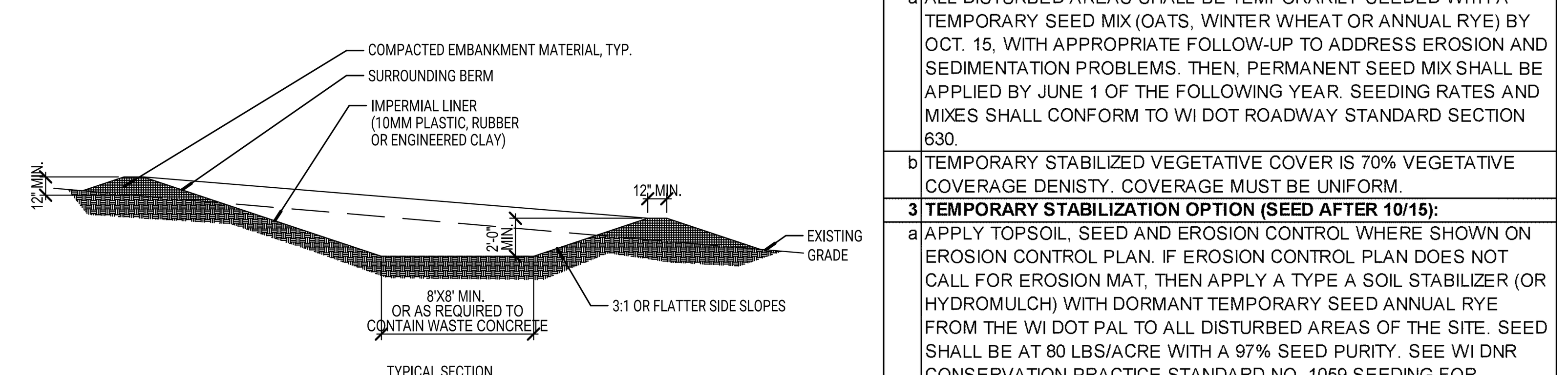

CONCRETE WASHOUT AREA INSTALLATION NOTES

1. SEE EROSION CONTROL PLAN FOR LOCATIONS OF CONCRETE WASHOUT AREA(S). TO BE PLACED A MIN. OF 50' FROM DRAINAGEWAYS, BODIES OF WATER, AND INLETS.
2. THE CONCRETE WASHOUT AREA(S) SHALL BE INSTALLED PRIOR TO ANY CONCRETE PLACEMENT ON SITE.
3. VEHICLE TRACKING CONTROL PAD IS REQ'D AT THE ACCESS POINT(S).
4. SIGNS SHALL BE PLACED AT THE CONSTRUCTION ENTRANCE, AT THE WASHOUT AREA(S), AND ELSEWHERE AS NECESSARY TO CLEARLY INDICATE THE LOCATION OF THE CONCRETE WASHOUT AREAS TO OPERATORS OF CONCRETE TRUCKS AND PUMP RIGS.
5. EXCAVATED MATERIAL SHALL BE UTILIZED IN PERIMETER BERM CONSTRUCTION.

CONCRETE WASHOUT AREA MAINTENANCE NOTES

6. THE CONCRETE WASHOUT AREA SHALL BE REPAIRED AND ENLARGED OR CLEANED OUT AS NECESSARY TO MAINTAIN CAPACITY FOR WASTED CONCRETE.
7. AT THE END OF CONSTRUCTION, ALL CONCRETE SHALL BE REMOVED FROM SITE AND DISPOSED OF AT AN APPROVED WASTE SITE.
8. WHEN CONCRETE WASHOUT AREA(S) IS REMOVED, THE DISTURBED AREA SHALL BE STABILIZED PER SITE EROSION CONTROL MEASURES.
9. INSPECT WEEKLY AND DURING AND AFTER ALL STORM EVENTS. CLEAN-OUT OR COVER WASHOUT AREA PRIOR TO PREDICTED STORM EVENTS TO PREVENT OVER-FLOW.

05 / C802 CONCRETE WASHOUT AREA

SCALE: NOT TO SCALE

EROSION CONTROL NOTES

	Initial Downstream Receiving Water of the State from the site: Swan Creek
	This project is anticipated to disturb approximately 3.82 Acres.
1	POST WDNR CERTIFICATE OF PERMIT COVERAGE ON SITE PRIOR TO LAND DISTURBANCE AND MAINTAIN UNTIL CONSTRUCTION ACTIVITIES HAVE CEASED, THE SITE IS STABILIZED, AND A NOTICE OF TERMINATION IS FILED WITH WDNR.
2	THE CONTRACTOR SHALL OBTAIN A NOTICE OF TERMINATION WITH THE DNR WHEN ALL LAND DISTURBING ACTIVITIES HAVE CEASED, ALL TEMPORARY EROSION AND SEDIMENT CONTROLS HAVE BEEN REMOVED, AND ALL DISTURBED AREAS HAVE PERENNIAL COVER OF AT LEAST 70%.
3	KEEP A COPY OF THE CURRENT EROSION CONTROL PLAN ON SITE THROUGHOUT THE DURATION OF THE PROJECT.
4	SUBMIT PLAN REVISIONS OR AMENDMENTS TO THE WDNR.
5	CONTRACTOR IS RESPONSIBLE FOR ROUTINE SITE INSPECTIONS AT LEAST ONCE EVERY 7 DAYS AND WITHIN 24 HOURS AFTER A RAINFALL EVENT OF 0.5 INCHES OR GREATER. KEEP INSPECTION REPORTS ON-SITE AND MAKE THEM AVAILABLE UPON REQUEST.
6	CONTRACTOR SHALL MAINTAIN A WEEKLY REPORT OF THE EROSION AND SEDIMENT CONTROL MEASURES AND CONDUCT MAINTENANCE TO ENSURE THE MEASURES ARE IN PROPER WORKING ORDER. THE MONITORING RECORD SHALL INCLUDE AT LEAST THE FOLLOWING:
a	DATE, TIME ANE EXACT PLACE OF INSPECTION.
b	NAME(S) OF INDIVIDUAL(S) PERFORMING INSPECTION.
c	AN ASSESSMENT OF THE CONDITION OF EROSION AND SEDIMENT CONTROLS
d	A DESCRIPTION OF ANY EROSION AND SEDIMENT CONTROL IMPLEMENTATION AND MAINTENANCE PERFORMED.
e	A DESCRIPTION OF THE SITE'S PRESENT PHASE OF CONSTRUCTION
	NOTE: THE DNR CONSTRUCTION SITE INSPECTION REPORT FORM CAN BE USED FOR THESE INSPECTIONS, WHICH IS LOCATED AT: HTTP://DNR.WI.GOV/RUNOFF/PDF/STORMWATER/3400187_CONSTRUCTION_SITE_INSPECTION_REPORT.PDF
7	INSPECT AND MAINTAIN ALL INSTALLED EROSION CONTROL PRACTICES UNTIL THE CONTRIBUTING DRAINAGE AREA HAS BEEN STABILIZED.
8	WHEN POSSIBLE: PRESERVE EXISTING VEGETATION (ESPECIALLY ADJACENT TO SURFACE WATERS), MINIMIZE LAND-DISTURBING CONSTRUCTION ACTIVITY ON SLOPES OF 20% OR MORE, MINIMIZE SOIL COMPACTION, AND PRESERVE TOPSOIL.
9	REFER TO THE WDNR TECHNICAL STANDARDS FOR STORM WATER CONSTRUCTION AT http://dnr.wi.gov/topic/stormwater/standards/const_standards.html
10	INSTALL PERIMETER CONTROLS AND ROCK CONSTRUCTION ENTRANCE(S) PRIOR TO ANY LAND-DISTURBING ACTIVITIES, INCLUDING CLEARING AND GRUBBING. USE WDNR TECHNICAL STANDARD STONE TRACKING PAD AND TIRE WASHING #1057 FOR ROCK CONSTRUCTION ENTRANCE(S).
11	INSTALL INLET PROTECTION PRIOR TO LAND-DISTURBING ACTIVITIES IN THE TRIBUTARY AREA AND/OR IMMEDIATELY UPON INLET INSTALLATION. COMPLY WITH WDNR TECHNICAL STANDARD STORM DRAIN INLET PROTECTION FOR CONSTRUCTION SITES #1060.
12	STAGE CONSTRUCTION GRADING ACTIVITIES TO MINIMIZE THE CUMMULATIVE EXPOSED AREA. CONDUCT ROUGH GRADING PER WDNR TECHNICAL STANDARD TEMPORARY GRADING PRACTICES FOR EROSION CONTROL #1067.
13	NOTIFY AUTHORITY HAVING JURISDICTION IF DEWATERING IS SCHEDULED TO OCCUR IN AREAS OF SOIL AND/OR GROUNDWATER CONTAMINATION, OR IF DEWATERING WILL OCCUR FROM A HIGH CAPACITY WELL (70 GPM OR MORE). DEWATER ONLY AFTER THE APPROPRIATE WDNR DEWATERING DISCHARGE PERMIT HAS BEEN OBTAINED.
14	DEWATERING OPERATIONS SHALL PROTECT ADJOINING PROPERTIES AND DISCHARGE LOCATIONS FROM EROSION AND PREVENT CONTAMINATION OR DEGRADATION OF QUALITY FOR GROUND AND SURFACE WATERS. ALL OPERATIONS SHALL IN ACCORDANCE WITH THE BEST MANAGEMENT PRACTICES PLAN THAT HAS BEEN DEVELOPED AND APPROVED FOR THIS SITE, WISCONSIN DEPARTMENT OF NATURAL RESOURCES CONSERVATION SEDIMENT CONTROL PRACTICE STANDARD, DE-WATERING, No. 1061, AND SHALL COMPLY WITH THE REQUIREMENTS OF THE WISCONSIN POLLUTANT DISCHARGE ELIMINATION SYSTEM (WPDES) GENERAL PERMIT NO. WI-0049344-05-0.
15	PROVIDE ANTI-SCOUR PROTECTION AND MAINTAIN NON-EROSIVE FLOW DURING DEWATERING. LIMIT PUMPING RATES TO EITHER (A) THE SEDIMENT BASIN/TRAP DESIGN DISCHARGE RATE, OR (B) THE BASIN DESIGN RELEASE RATE WITH THE CORRECTLY-FITTED HOSE AND GEOTEXTILE FILTER BAG. PERFORM DEWATERING OF ACCUMULATED SURFACE RUNOFF IN ACCORDANCE WITH WDNR TECHNICAL STANDARD DE-WATERING #1061.
16	COMPLETE AND STABILIZE SEDIMENT BASINS/TRAPS PRIOR TO MASS LAND DISTURBANCE TO CONTROL RUNOFF DURING CONSTRUCTION. REMOVE SEDIMENT AS NEEDED TO MAINTAIN 3 FEET OF DEPTH TO THE OUTLET, AND PROPERLY DISPOSE OF SEDIMENT REMOVED DURING MAINTENANCE. CONSTRUCT AND MAINTAIN THE SEDIMENT BASIN PER WDNR TECHNICAL STANDARD SEDIMENT BASIN #1064
17	CONSTRUCT AND PROTECT THE BIOINFILTRATION BASIN AND VEGETATION FROM RUNOFF AND SEDIMENT DURING CONSTRUCTION.
18	REMOVE SEDIMENT FROM BEHIND SILT FENCES AND SEDIMENT BARRIERS BEFORE SEDIMENT REACHES A DEPTH THAT IS EQUAL TO ONE-HALF OF THE FENCE AND/OR BARRIER HEIGHT. INSTALL AND MAINTAIN SILT FENCING PER WDNR TECHNICAL STANDARD SILT FENCE #1056.
19	REPAIR BREAKS AND GAPS IN SILT FENCES AND BARRIERS IMMEDIATELY. REPLACE DECOMPOSING STRAW BALES (TYPICAL BALE LIFE IS 3 MONTHS). LOCATE, INSTALL, AND MAINTAIN STRAW BALES PER WDNR TECHNICAL STANDARD DITCH CHECKS #1062.
20	INSTALL AND MAINTAIN FILTER SOCKS IN ACCORDANCE WITH WDNR TECHNICAL STANDARD INTERIM MANUFACTURED PERIMETER CONTROL AND SLOPE INTERRUPTION PRODUCTS # 1071.
21	IMMEDIATELY STABILIZE STOCKPILES AND SURROUND STOCKPILES WITH SILT FENCE OR OTHER PERIMETER CONTROL IF STOCKPILES WILL REMAIN INACTIVE FOR 7 DAYS OR LONGER.
22	IMMEDIATELY STABILIZE ALL DISTURBED AREAS THAT WILL REMAIN INACTIVE FOR 14 DAYS OR LONGER. BETWEEN SEPTEMBER 15 AND OCTOBER 15: STABILZE WITH MULCH, TACKIFIER, AND A PERENNIAL SEED MIXED WITH WINTER WHEAT, ANNUAL OATS, OR ANNUAL RYE. OCTOBER 15 THROUGH COLD WEATHER: STABILIZE WITH A POLYMER AND DORMANT SEED MIX.
23	STABILIZE AREAS OF FINAL GRADING WITHIN 7 DAYS.
24	SWEEP/CLEAN UP ALL SEDIMENT THAT MOVES OFF-SITE DUE TO CONSTRUCTION ACTIVITY OR STORM EVENTS BEFORE THE END OF THE SAME WORKDAY OR AS DIRECTED BY AUTHORITY HAVING JURISDICTION. SEPARATE SWEPT MATERIALS (SOILS AND TRASH) AND DISPOSE OF APPROPRIATELY.
25	CONTRACTOR IS RESPONSIBLE FOR CONTROLLING DUST PER WDNR TECHNICAL STANDARD DUST CONTROL ON CONSTRUCTION SITES # 1068.
26	PROPERLY DISPOSE OF ALL WASTE AND UNUSED BUILDING MATERIALS (INCLUDING GARBAGE, DEBRIS, CLEANING WASTES, OR OTHER CONSTRUCTION MATERIALS) AND DO NOT ALLOW THESE MATERIALS TO BE CARRIED BY RUNOFF INTO THE RECEIVING CHANNEL.
27	COORDINATE WITH THE AUTHORITY HAVING JURISDICTION TO UPDATE THE LAND DISTURBANCE PERMIT TO INDICATE THE ANTICIPATED OR LIKELY DISPOSAL LOCATIONS FOR ANY EXCAVATED SOILS OR CONSTRUCTION DEBRIS THAT WILL LEAVE THE SITE. THE DEPOSITED OR STOCKPILED MATERIAL NEEDS TO INCLUDE PERIMETER SEDIMENT CONTROL MEASURES (SUCH AS SILT FENCE, HAY BALES, FILTER SOCKS, OR COMPACTED EARTHEN BERMS).
30	INSTALL ADDITIONAL EROSION AND SEDIMENT CONTROL MEASURES AS NEEDED (SUCH AS TEMPORARY SEDIMENT BASINS, DITCH CHECKS, EROSION CONTROL MATTING, SILT FENCING, FILTER SOCKS, SWALES, ETC.), OR AS DIRECTED BY AUTHORITY HAVING JURISDICTION.
31	CONTRACTOR IS RESPONSIBLE FOR COMPLYING WITH ALL APPLICABLE WDNR REMEDIATION AND WASTE MANAGEMENT REQUIREMENTS FOR HANDLING AND DISPOSING OF CONTAMINATED MATERIALS. SITE-SPECIFIC INFORMATION FOR AREAS WITH KNOWN OR SUSPECTED SOIL AND/OR GROUNDWATER CONTAMINATION CAN BE FOUND ON WDNR'S BUREAU OF REMEDIATION AND REDEVELOPMENT TRACKING SYSTEM (BRRTS) PUBLIC DATABASE AT: http://dnr.wi.gov/botw/

LATE SEASON STABILIZATION NOTES

	CONSTRUCTION SITE MUST BE PERMANENTLY OR TEMPORARILY STABILIZED BY NOVEMBER 1 OF EACH YEAR. CRITERIA FOR STABILIZATION IS:
1	**PERMANENT VEGETATION OPTION:**
a	SEED ALL DISTURBED AREAS WITH PERMANENT VEGETATION BY SEP. 15, WITH APPROPRIATE FOLLOW-UP TO ADDRESS EROSION AND SEDIMENTATION PROBLEMS.
2	**TEMPORARY VEGETATION OPTION (SEED BEFORE 10/15):**
a	ALL DISTURBED AREAS SHALL BE TEMPORARILY SEEDED WITH A TEMPORARY SEED MIX (OATS, WINTER WHEAT OR ANNUAL RYE) BY OCT. 15, WITH APPROPRIATE FOLLOW-UP TO ADDRESS EROSION AND SEDIMENTATION PROBLEMS. THEN, PERMANENT SEED MIX SHALL BE APPLIED BY JUNE 1 OF THE FOLLOWING YEAR. SEEDING RATES AND MIXES SHALL CONFORM TO WI DOT ROADWAY STANDARD SECTION 630.
b	TEMPORARY STABILIZED VEGETATIVE COVER IS 70% VEGETATIVE COVERAGE DENISTY. COVERAGE MUST BE UNIFORM.
3	**TEMPORARY STABILIZATION OPTION (SEED AFTER 10/15):**
a	APPLY TOPSOIL, SEED AND EROSION CONTROL WHERE SHOWN ON EROSION CONTROL PLAN. IF EROSION CONTROL PLAN DOES NOT CALL FOR EROSION MAT, THEN APPLY A TYPE A SOIL STABILIZER (OR HYDROMULCH) WITH DORMANT TEMPORARY SEED ANNUAL RYE FROM THE WI DOT PAL TO ALL DISTURBED AREAS OF THE SITE. SEED SHALL BE AT 80 LBS/ACRE WITH A 97% SEED PURITY. SEE WI DNR CONSERVATION PRACTICE STANDARD NO. 1059 SEEDING FOR CONSTRUCTION SITE EROSION CONTROL. PROVIDE 2% LOOSE SOIL FOR SEED BED.
b	TEMPORARY STABILIZATION IS CONSIDERED COMPLIANT IF IT HAS SITE COVERAGE OF TOPSOIL, SEED AND TYPE A SOIL STABILIZER; AND/OR EROSION CONTROL MATTING WHERE THE SITE RESTORATION PLAN CALLS FOR EROSION CONTROL MATTING; AND/OR RIP RAP AS SHOWN ON PLANS; AND/OR FUTURE ROAD SURFACES GRADED WITH STONE BASE; AND/OR DITCHES WITH DITCH CHECKS AS SHOWN ON PLANS.
3	**TEMPORARY STABILIZATION OPTION (UNABLE TO RE-APPLY TOPSOIL AFTER 11/1):**
a	APPLY A TYPE A SOIL STABILIZER FROM THE WI DOT PAL TO ALL DISTURBED AREAS. INSTALL DITCH CHECKS IN ALL DITCHES WITH SLOPE GREATER THAN 0.5% AT INTERVALS WHERE THE TOP FO THE DOWNHILL DITCH CHECK IS AT THE ELEVATION OF THE FOOT OF THE UPHILL DITCH CHECK. (TRIANGULAR SILT DIKE, STONE INSTALLED PER WDNR TECH STANDARD, SEDIMENT LOG OR COMPARABLE PRODUCT APPROVED BY AUTHORITY HAVING JURISDICTION)
NOTES:	
	DISTURBED AREAS EXCLUDE ROADS AND PARKING AREAS THAT HAVE BEEN GRADED WITH BASE COURSE INSTALLED, AS WELL AS THE IMMEDIATE VICINITY (I.E. 30') OF BUILDINGS THAT ARE ACTIVELY UNDER CONSTRUCTION WHERE EXTERIOR WORK IS STILL GOING ON, AND HAVE EFFECTIVE TEMPORARY BMPs TO CONTROL SEDIMENT.

ANGUS-YOUNG
ARCHITECTS/ENGINEERS
Janesville | Madison

ROCK COUNTY

ORFORDVILLE SALT SHED

734 W. BELOIT STREET
ORFORDVILLE, WI 53576

ROCK COUNTY WISCONSIN

ISSUANCES / REVISIONS

NO:	DESCRIPTION:	DATE:
01	VILLAGE SITE PLAN SUBMITTAL	09.23.2022
02	VILLAGE SITE PLAN SUBMITTAL	01.13.2023
03	FOR BIDDING	02.01.2023
	---	---
	---	---
	---	---
	---	---
	---	---
	---	---
	---	---
	---	---
	---	---
	---	---
	---	---
	---	---

1:09:48 PM 1/13/2023

Due to electronic distribution, this drawing may not be printed to the scale indicated on the drawings. Do NOT use scale to determine dimensions or sizes.

No part of this drawing may be used or reproduced in any form or by any means, or stored in a database or retrieval system, without prior written permission of.

ANGUS - YOUNG ASSOCIATES, INC.
Copyright © 2023 All Rights Reserved

PROJECT NUMBER
74660

APPROVED BY
BTW

REVIEWED BY
KAU

DRAWN BY
MWT

EROSION CONTROL NOTES AND DETAILS

C802

FILE: X:\74660\cad\74660shC802.dwg mtrosper

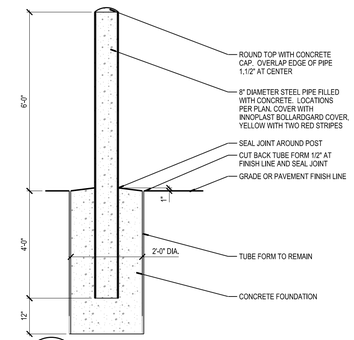

04 A101 TYPICAL EXTERIOR 8" BOLLARD

SCALE: 1/2"=1'-0"

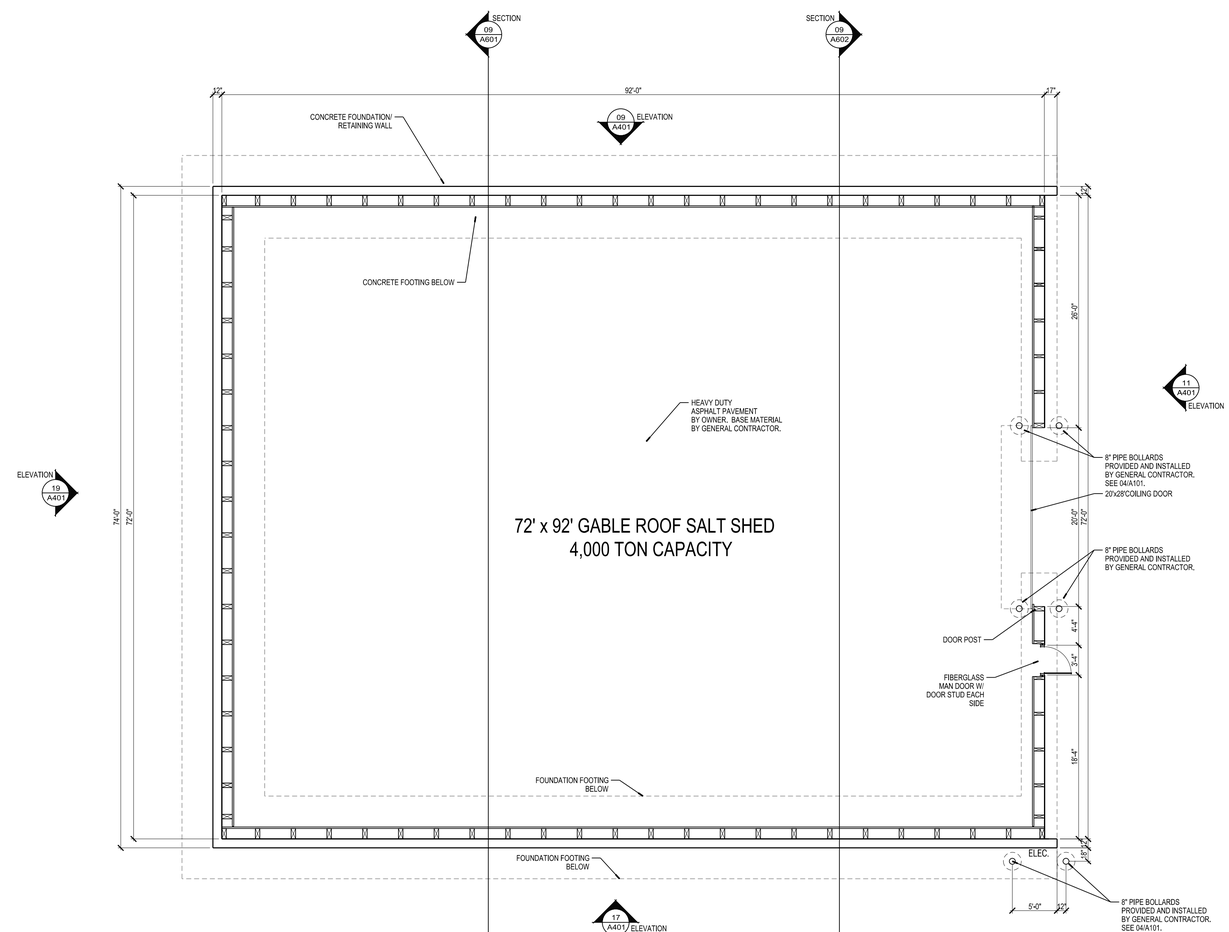

SALT SHED PLAN

SCALE: 1/8"=1'-0"

ANGUS-YOUNG
ARCHITECTS/ENGINEERS
Janesville | Madison

ROCK COUNTY
PUBLIC WORKS

ORFORDVILLE SALT
SHED

734 WEST BELOIT ST.
ORFORDVILLE, WI

ROCK COUNTY STATE OF WISCONSIN

ISSUANCES / REVISIONS		
NO:	DESCRIPTION:	DATE:
BD	BID/CONSTRUCTION	02/01/2023

12:30:34 PM 1/13/2023

Due to electronic distribution, this drawing may not be printed to the scale indicated on the drawings. Do NOT use scale to determine dimensions or sizes.

No part of this drawing may be used or reproduced in any form or by any means, or stored in a database or retrieval system, without prior written permission of.

ANGUS - YOUNG ASSOCIATES, INC.
Copyright © 2022 All Rights Reserved

PROJECT NUMBER
74660

APPROVED BY
JJS

REVIEWED BY
BTW

DRAWN BY
CTC

SALT SHED PLAN
AND DETAILS

A101

SCALE: 1/8"=1'-0"
PLOTTED BY: BradW
X:\74660\cad\74660sha101.dgn
ORIGINAL SIZE: 24" x 36"

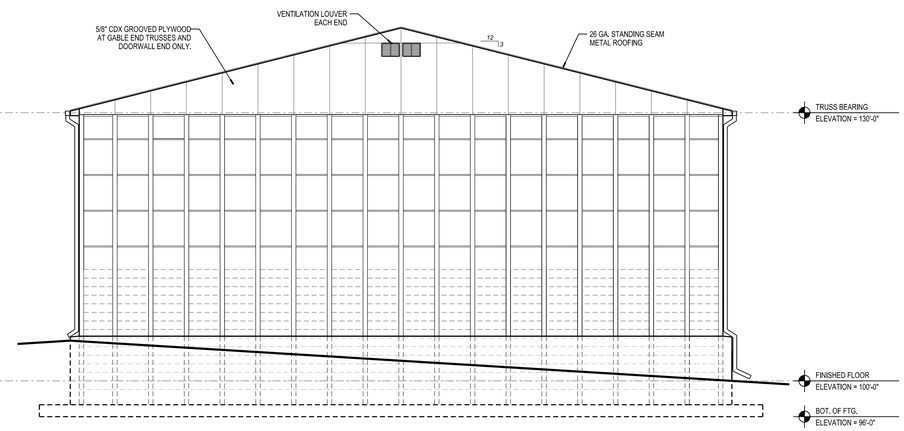

19 A401 WEST ELEVATION

SCALE: 1/8" = 1'-0"

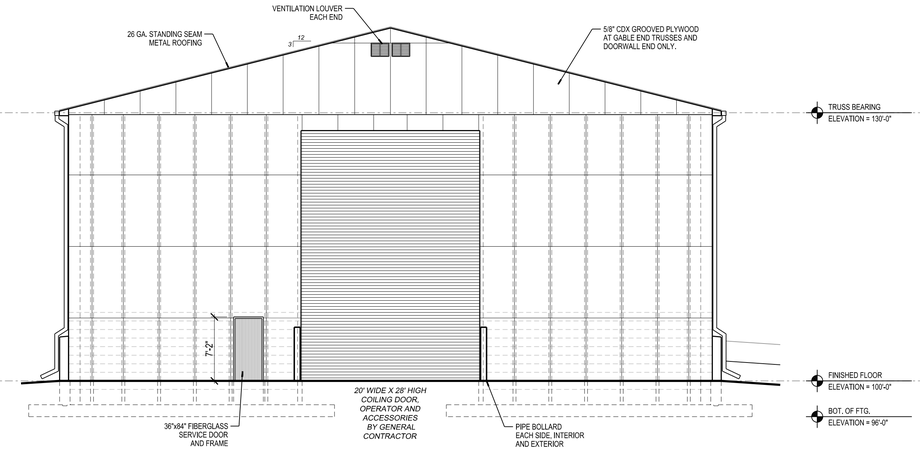

11 A401 EAST ELEVATION

SCALE: 1/8" = 1'-0"

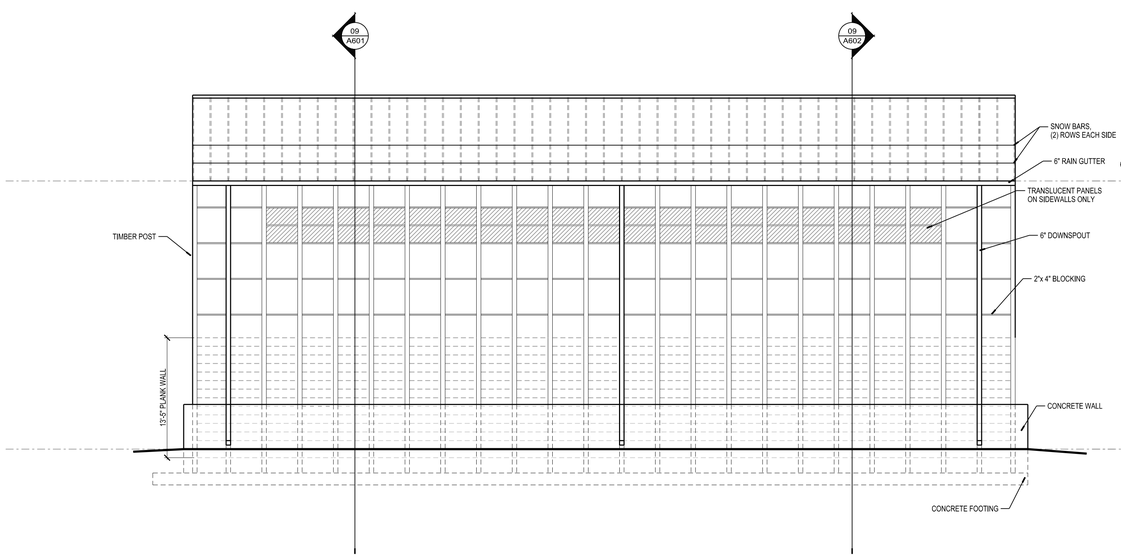

17 A401 SOUTH ELEVATION

SCALE: 1/8" = 1'-0"

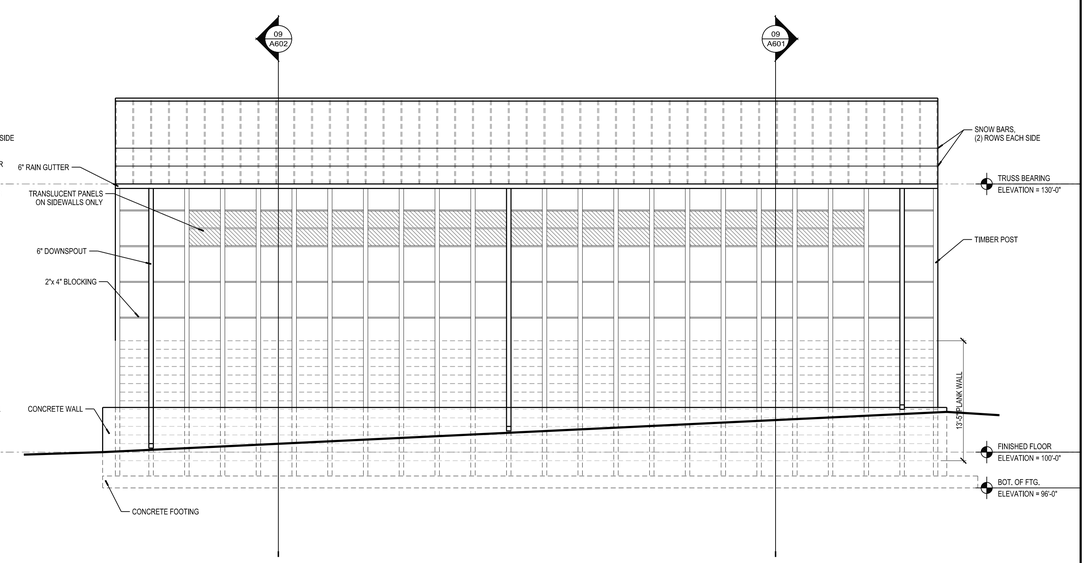

09 A401 NORTH ELEVATION

SCALE: 1/8" = 1'-0"

NOTE: ALL EXPOSED FOUNDATION WALL CONICAL FORM TIES TO BE REMOVED BACK TO CONCRETE AND FILLED WITH CEMENTITIOUS PATCHING MATERIAL, FLUSH WITH WALL SURFACE. TYPICAL ON ALL EXTERIOR SIDES.

ANGUS-YOUNG
ARCHITECTS/ENGINEERS
Janesville | Madison

ROCK COUNTY PUBLIC WORKS

ORFORDVILLE SALT SHED

734 WEST BELOIT ST.
ORFORDVILLE, WI

ROCK COUNTY STATE OF WISCONSIN

ISSUANCES / REVISIONS

NO:	DESCRIPTION:	DATE:
BD	BID/CONSTRUCTION	02/01/2023

12:28:35 PM 1/13/2023

Due to electronic distribution, this drawing may not be printed to the scale indicated on the drawings. Do NOT use scale to determine dimensions or sizes.

No part of this drawing may be used or reproduced in any form or by any means, or stored in a database or retrieval system, without prior written permission of.

ANGUS - YOUNG ASSOCIATES, INC.
Copyright © 2022 All Rights Reserved

PROJECT NUMBER
74660

APPROVED BY
JJS

REVIEWED BY
BTW

DRAWN BY
CTC

BUILDING ELEVATIONS

A401

ORIGINAL SIZE: 24" x 36" PLOTTED BY: BradW X:\74660\cad\74660sht401.dgn SCALE: 1/8"=1'-0"

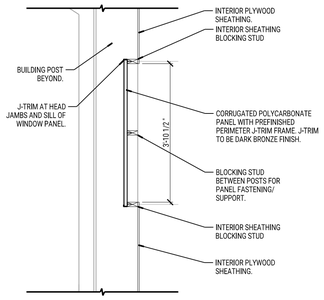

08 A601 TRANSLUCENT PANEL WINDOW DETAIL

SCALE: 1/2"=1'-0"

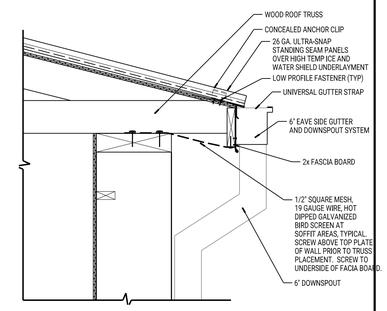

04 A601 GUTTER DETAIL

SCALE: 1"=1'-0"

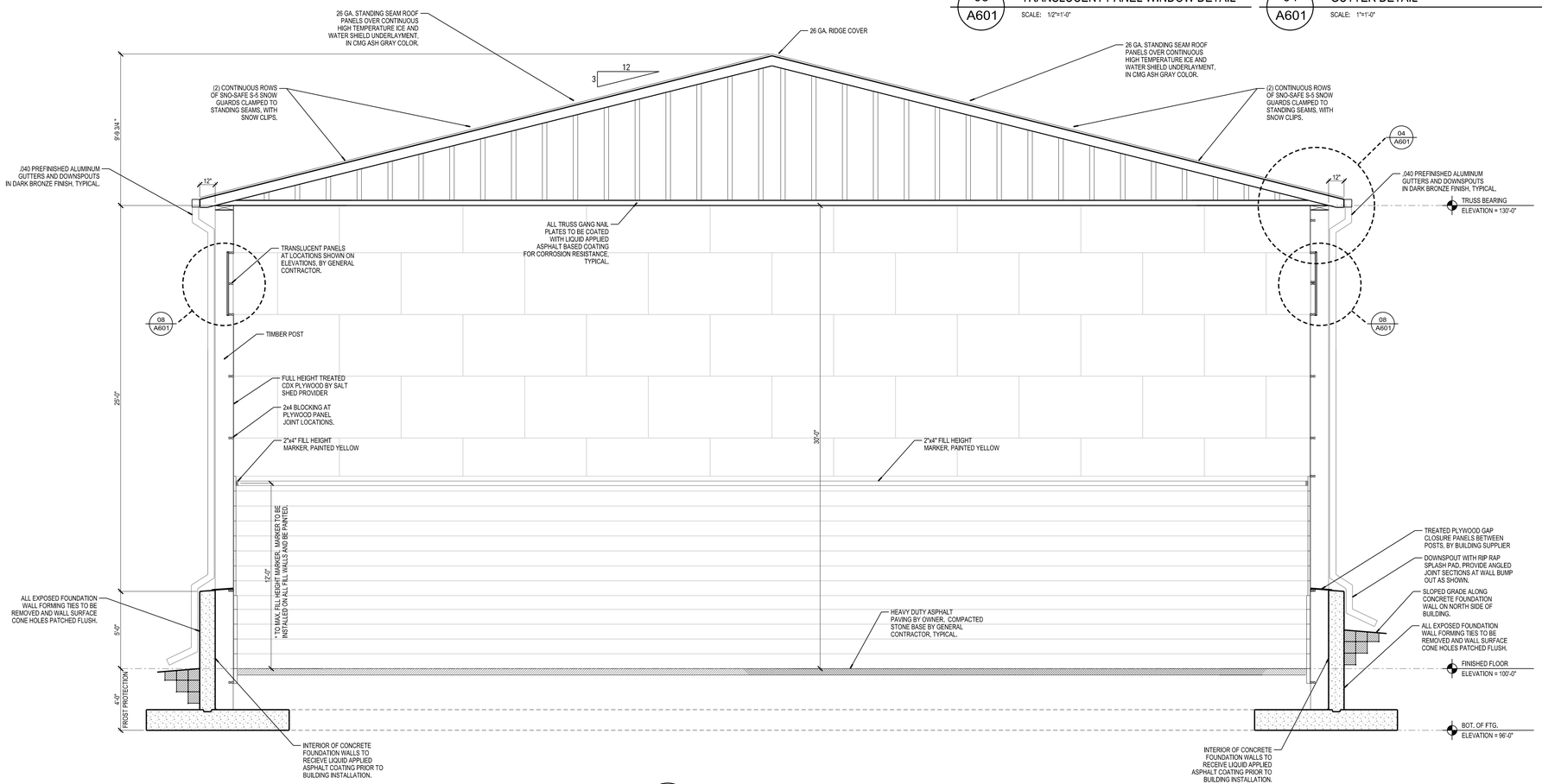

09 A601 BUILDING SECTION

SCALE: 1/4" = 1'-0"

SCALE: 1/4"=1'-0"

X:\74660\cad\74660shA601.dgn

PLOTTED BY: BradW

ORIGINAL SIZE: 24" x 36"

ANGUS-YOUNG
ARCHITECTS/ENGINEERS
Janesville | Madison

ROCK COUNTY PUBLIC WORKS

ORFORDVILLE SALT SHED

734 WEST BELOIT ST.
ORFORDVILLE, WI

ROCK COUNTY STATE OF WISCONSIN

ISSUANCES / REVISIONS

NO:	DESCRIPTION:	DATE:
BD	BID/CONSTRUCTION	02/01/2023

12:00:35 PM 1/13/2023

Due to electronic distribution, this drawing may not be printed to the scale indicated on the drawings. Do NOT use scale to determine dimensions or sizes.

No part of this drawing may be used or reproduced in any form or by any means, or stored in a database or retrieval system, without prior written permission of.

ANGUS - YOUNG ASSOCIATES, INC.
Copyright © 2022 All Rights Reserved

PROJECT NUMBER
74660

APPROVED BY
JJS

REVIEWED BY
BTW

DRAWN BY
CTC

BUILDING SECTION VIEW

A601

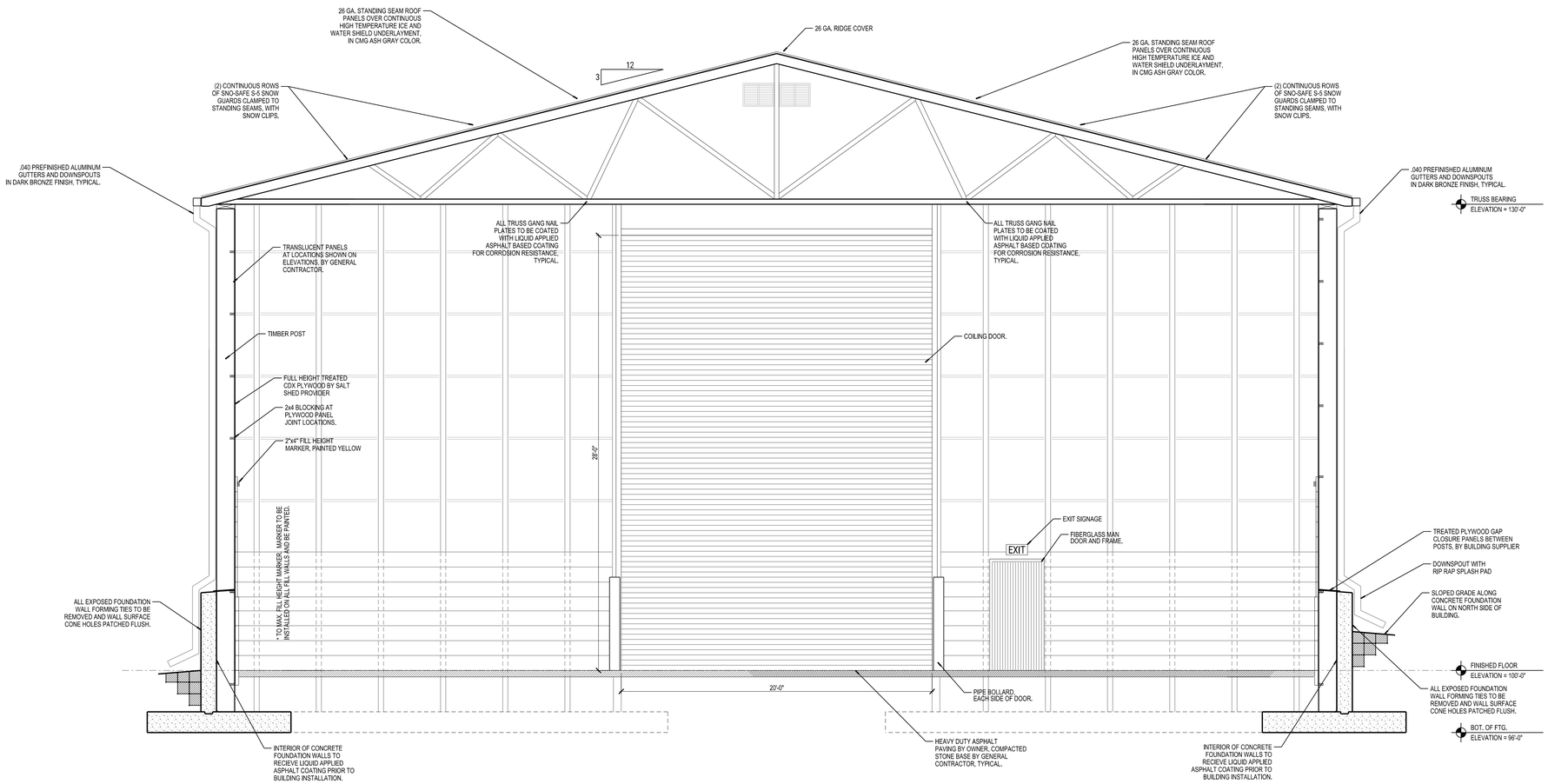

09
A601

BUILDING SECTION

SCALE: 1/4" = 1'-0"

SCALE:

X:\74660\cad\74660bA602.dgn

PLOTTED BY: BradW

ORIGINAL SIZE: 24" x 36"

ANGUS-YOUNG
ARCHITECTS/ENGINEERS
Janesville | Madison

ROCK COUNTY
PUBLIC WORKS

ORFORDVILLE SALT
SHED

734 WEST BELOIT ST.
ORFORDVILLE, WI

ROCK COUNTY STATE OF WISCONSIN

ISSUANCES / REVISIONS

NO:	DESCRIPTION:	DATE:
BD	BID/CONSTRUCTION	02/01/2023

1:22:36 PM 1/13/2023

Due to electronic distribution, this drawing may not be printed to the scale indicated on the drawings. Do NOT use scale to determine dimensions or sizes.

No part of this drawing may be used or reproduced in any form or by any means, or stored in a database or retrieval system, without prior written permission of.

ANGUS - YOUNG ASSOCIATES, INC.
Copyright © 2022 All Rights Reserved

PROJECT NUMBER
74660

APPROVED BY
JJS

REVIEWED BY
BTW

DRAWN BY
CTC

BUILDING SECTION VIEW

A602

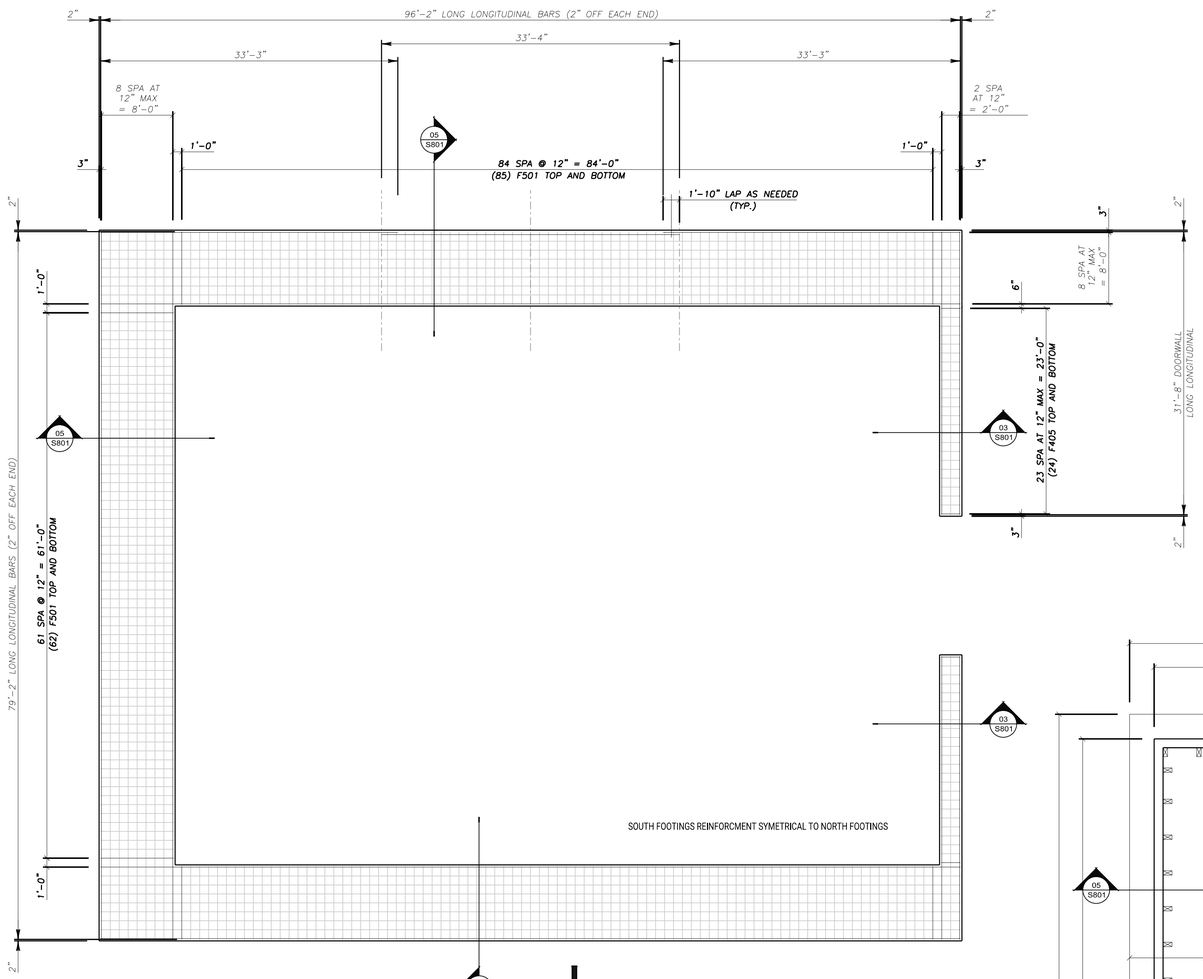

FOOTING REINFORCEMENT PLAN

SCALE: 1/8"=1'-0"

DESIGN DATA:

THE 2015 INTERNATIONAL BUILDING CODE GOVERNS.

THE DESIGN OF THIS STRUCTURE COMPLIES WITH THE BULDING CODE AND SUPPLEMENTAL SPECIFICATIONS AS INDICATED IN THE CODE AND THE DESIGN COMPUTATIONS.

1) USE AND OCCUPANCY CLASSIFICATION - GROUP S-2
2) TYPE OF CONSTRUCTION = V-B
3) BULK STORAGE: 80 PCF SALT, 12FT. AT WALLS, 25FT. MAX. FILL HT. MAX. SLOPE SHALL BE 1 VERTICAL TO 2 HORIZONTAL.
4) ROOF LIVE LOAD USED IN THE DESIGN 33.6 PSF
   A) GROUND SNOW LOAD 40 PSF
   B) FLAT ROOF SNOW LOAD 33.6 PSF
   C) SNOW EXPOSURE FACTOR 1.0
   D) THERMAL FACTOR 1.2
5) A) BASIC WIND SPEED 100 MPH
   B) OCCUPANCY CATEGORY 1
   C) EXPOSURE "C"

CONSTRUCTION NOTES:

FOOTINGS ARE DESIGNED FOR A NET ALLOWABLE BEARING PRESSURE OF 3,000 PSF, THE GEOTECNICAL ENGINEER OR PROJECT ENGINEER ON SITE SHALL VERIFY.

CONCRETE CONSTRUCTION, INCLUDING BUT NOT LIMITED TO MIX DESIGN, QUALITY CONTROL, PLACEMENT, COLD WEATHER PROVISIONS, AND ANCHORAGE INSTALLATION, SHALL BE IN ACCORDANCE WITH THE CODE AND THE BUILDING CODE REQUIREMENTS FOR STRUCTURAL CONCRETE (ACI 318) AS APPROVED BY THE PROJECT ENGINEER ON SITE. CONCRETE TO BE 4000 PSI, NORMAL WEIGHT. ALL REINFORCEMENT STEEL SHALL BE GRADE 60, EPOXY COATED.

FOUNDATION AND SLAB PLAN NOTES

1. TYPICAL FLOOR = HEAVY DUTY ASPHALT PAVEMENT INSTALLED BY OWNER. COMPACTED BASE MATERIAL BY CONTRACTOR.
2. FINISHED FLOOR ELEVATION = 100'-0" UNLESS NOTED OTHERWISE
3. TOP OF FOUNDATION WALL ELEVATION = 108'-0" UNLESS NOTED OTHERWISE
4. ALL REINFORCMENT TO BE EPOXY COATED.
5. FOUNDATION WALLS SHALL BE 1'-0" THICK UNLESS NOTED OTHERWISE
6. TOP OF EXTERIOR FOOTING ELEVATION = 3'-0" BELOW FINISHED FLOOR UNLESS NOTED OTHERWISE
7. NOT USED
8. WALL FOOTINGS FOR 1'-0" THICK FOUNDATION WALLS SHALL BE 8'-6" WIDE x 1'-3" THICK x CONTINUOUS STRIPS REINFORCED PER FOUNDATION WALL DETAIL.
9. FOOTINGS WITHOUT FOUNDATION WALLS SHALL BE 2'-6" x 1'-3" x CONTINUOUS STRIPS REINFORCED PER FOOTING DETAIL.
10. ALL CONICAL FORM TIES SHALL BE REMOVED BACK TO CONCRETE SURFACE. PATCH CONICAL HOLES WITH CEMENTITIOUS PATCHING MATERIAL FLUSH WITH WALL SURFACE. TYPICAL ALL EXPOSED EXTERIOR WALL LOCATIONS.
11. FOUNDATION WALL TOPS SHALL BE SLOPED TO SHED WATER TO EXTERIOR

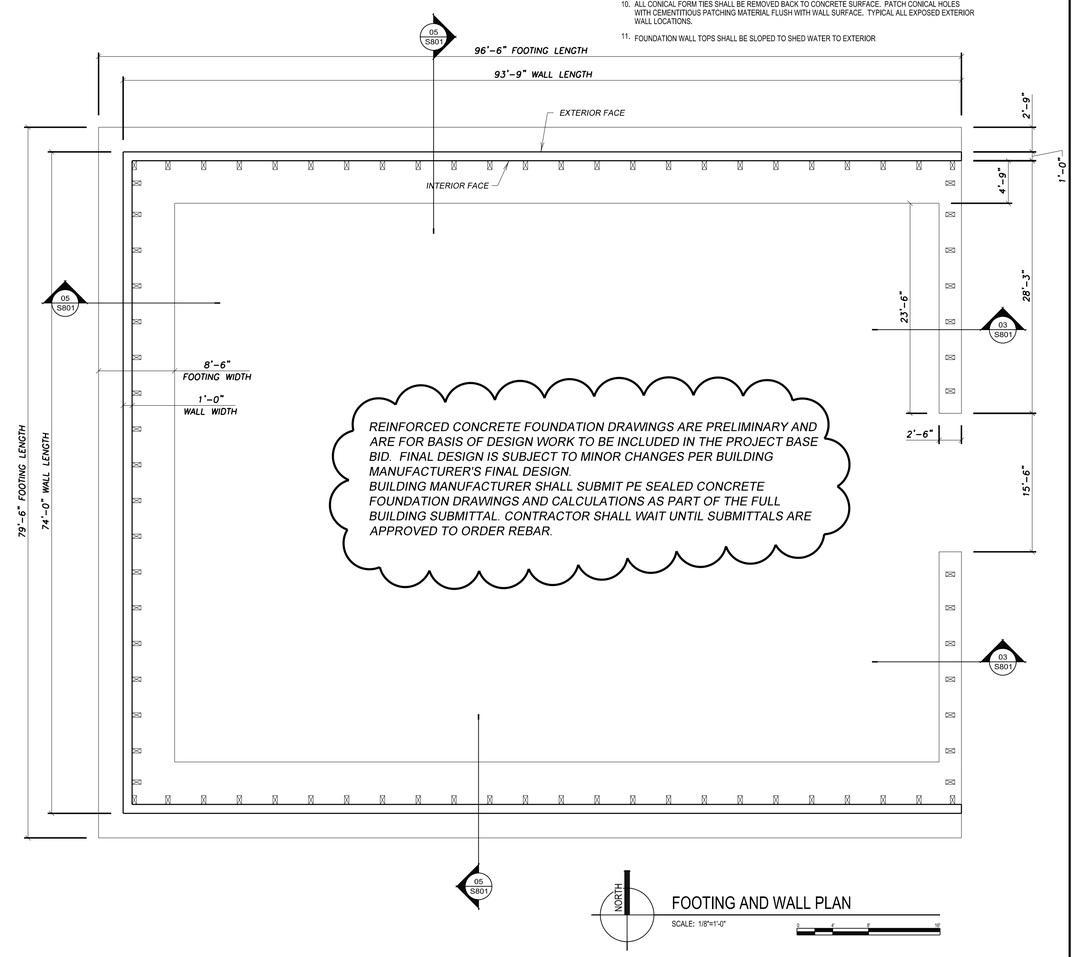

REINFORCED CONCRETE FOUNDATION DRAWINGS ARE PRELIMINARY AND ARE FOR BASIS OF DESIGN WORK TO BE INCLUDED IN THE PROJECT BASE BID. FINAL DESIGN IS SUBJECT TO MINOR CHANGES PER BUILDING MANUFACTURER'S FINAL DESIGN.
BUILDING MANUFACTURER SHALL SUBMIT PE SEALED CONCRETE FOUNDATION DRAWINGS AND CALCULATIONS AS PART OF THE FULL BUILDING SUBMITTAL. CONTRACTOR SHALL WAIT UNTIL SUBMITTALS ARE APPROVED TO ORDER REBAR.

FOOTING AND WALL PLAN

SCALE: 1/8"=1'-0"

ANGUS-YOUNG
ARCHITECTS/ENGINEERS
Janesville | Madison

ROCK COUNTY PUBLIC WORKS

ORFORDVILLE SALT SHED

734 WEST BELOIT ST.
ORFORDVILLE, WI

ROCK COUNTY STATE OF WISCONSIN

ISSUANCES / REVISIONS		
NO:	DESCRIPTION:	DATE:
BD	BID/CONSTRUCTION	02/01/2023

12:20:42 PM 1/13/2023

Due to electronic distribution, this drawing may not be printed to the scale indicated on the drawings. Do NOT use scale to determine dimensions or sizes.

No part of this drawing may be used or reproduced in any form or by any means, or stored in a database or retrieval system, without prior written permission of.

ANGUS - YOUNG ASSOCIATES, INC.
Copyright © 2022 All Rights Reserved

PROJECT NUMBER
74660

APPROVED BY
JJS

REVIEWED BY
BTW

DRAWN BY
BTW

STRUCTURAL FOUNDATION PLANS AND NOTES

S101

SCALE: 1/8"=1'-0"
PLOTTED BY: BradW
X:\74660\cad\74660sS101.dgn
ORIGINAL SIZE: 24" x 36"

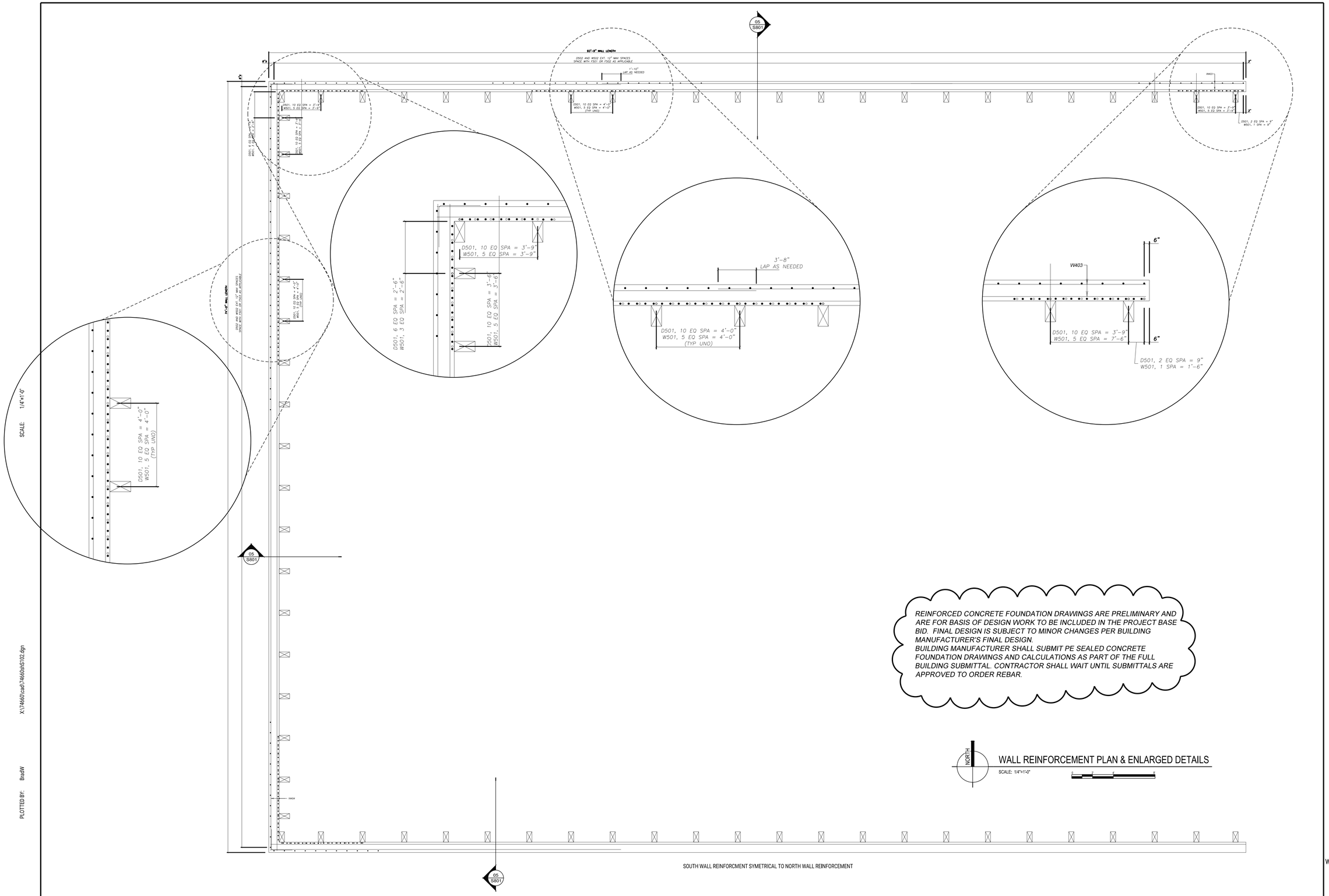

REINFORCED CONCRETE FOUNDATION DRAWINGS ARE PRELIMINARY AND ARE FOR BASIS OF DESIGN WORK TO BE INCLUDED IN THE PROJECT BASE BID. FINAL DESIGN IS SUBJECT TO MINOR CHANGES PER BUILDING MANUFACTURER'S FINAL DESIGN.
BUILDING MANUFACTURER SHALL SUBMIT PE SEALED CONCRETE FOUNDATION DRAWINGS AND CALCULATIONS AS PART OF THE FULL BUILDING SUBMITTAL. CONTRACTOR SHALL WAIT UNTIL SUBMITTALS ARE APPROVED TO ORDER REBAR.

ANGUS-YOUNG
ARCHITECTS/ENGINEERS
Janesville | Madison

ROCK COUNTY
PUBLIC WORKS

ORFORDVILLE SALT
SHED

734 WEST BELOIT ST.
ORFORDVILLE, WI

ROCK COUNTY STATE OF WISCONSIN

ISSUANCES / REVISIONS

NO:	DESCRIPTION:	DATE:
BD	BID/CONSTRUCTION	02/01/2023

12:32:43 PM 1/13/2023

Due to electronic distribution, this drawing may not be printed to the scale indicated on the drawings. Do NOT use scale to determine dimensions or sizes.

No part of this drawing may be used or reproduced in any form or by any means, or stored in a database or retrieval system, without prior written permission of.

ANGUS - YOUNG ASSOCIATES, INC.
Copyright © 2022 All Rights Reserved

PROJECT NUMBER
74660

APPROVED BY
JJS

REVIEWED BY
BTW

DRAWN BY
BTW

WALL REINFORCEMENT PLAN& ENLARGED DETAILS

S102

ORIGINAL SIZE: 24" x 36"
PLOTTED BY: BradW
X:\74660\cad\74660sNS102.dgn

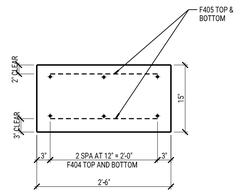

03 / S801 CONCRETE FOOTING SECTION AT DOORWALL

SCALE: 3/4"=1'-0"

SECTION KEYNOTES

1. REINFORCEMENT SHALL BE CAREFULLY PLACED TO AVOID ANCHOR BOLTS. 2" CLEAR SHALL BE PROVIDED ON EACH SIDE.
2. SEE FOOTING REINFORCEMENT PLAN
3. SEE WALL REINFORCEMENT PLAN
4. PROVIDE 1'-10" LAPS AS NEEDED. LOCATION DETERMINED BY CONTRACTOR. BAR LENGTH TABULATED IS THE OUT-TO-OUT MEASUREMENT.

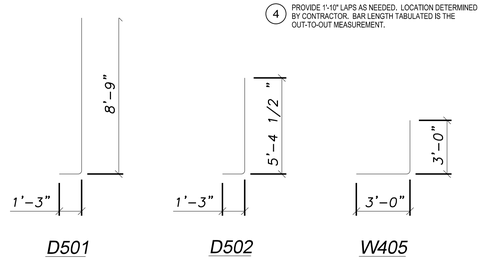

ESTIMATED BILL OF REINFORCEMENT				
BAR	QTY.	LENGTH	SHAPE	LOCATION
D501	649	6'-8"	BENT	DOWEL, WALL INT
D502	262	4'-5"	BENT	DOWEL, WALL EXT
F501	464	8'-2"	STRT.	FOOTING ~ TOP & BOTTOM
F402	36	96'-2"	STRT.	FOOTING ~ T&B LONG SIDEWALL
F403	18	79'-2"	STRT.	FOOTING ~ T&B LONG ENDWALL
F404	12	31'-8"	STRT.	FOOTING ~ T&B LONG DOORWALL
F405	96	2'-2"	STRT.	FOOTING ~ T&B DOORWALL
W501	324	5'-4"	STRT.	WALL INT ~ VERTICAL
W502	262	7'-6"	STRT.	WALL EXT ~ VERTICAL
W403	32	93'-5"	STRT.	WALL ~ HORIZONTAL LONG SIDEWALL
W404	16	73'-8"	STRT.	WALL ~ HORIZONTAL LONG ENDWALL
W405	32	4'-0"	BENT	WALL ~ HORIZONTAL CORNER

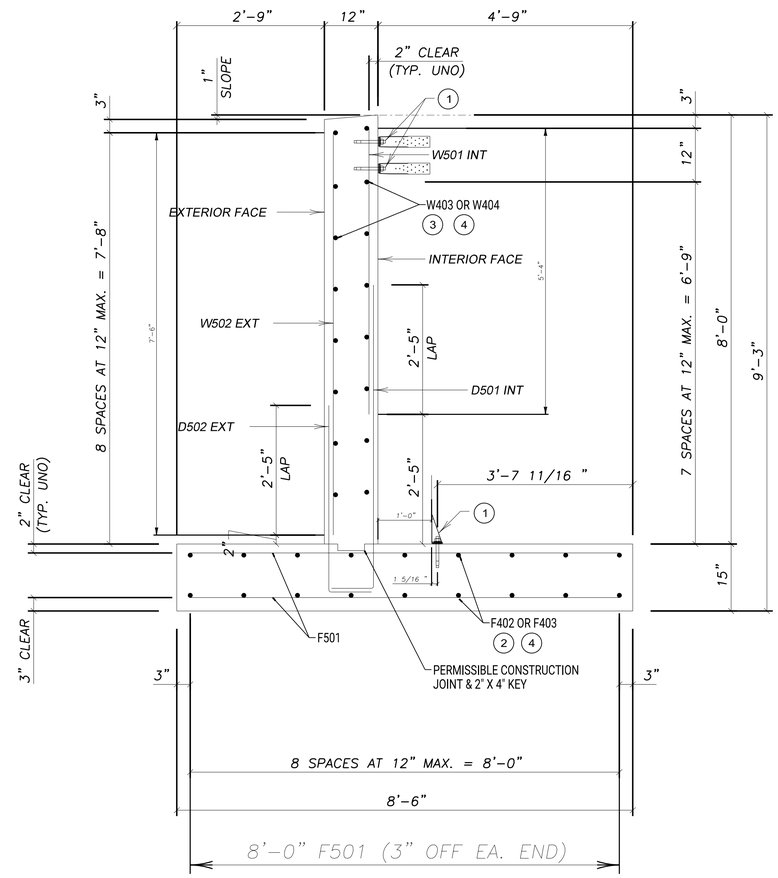

ALL REINFORCEMENT TO BE EPOXY COATED

05 / S801 REINFORCED CONCRETE FOOTING AND FOUNDATION WALL SECTION AT LOAD BEARING WALLS

SCALE: 3/4"=1'-0"

ANGUS-YOUNG
ARCHITECTS/ENGINEERS
Janesville | Madison

ROCK COUNTY
PUBLIC WORKS

ORFORDVILLE SALT SHED

734 WEST BELOIT ST.
ORFORDVILLE, WI

ROCK COUNTY STATE OF WISCONSIN

ISSUANCES / REVISIONS

NO:	DESCRIPTION:	DATE:
BD	BID/CONSTRUCTION	02/01/2023

12:20:44 PM 1/13/2023

Due to electronic distribution, this drawing may not be printed to the scale indicated on the drawings. Do NOT use scale to determine dimensions or sizes.

No part of this drawing may be used or reproduced in any form or by any means, or stored in a database or retrieval system, without prior written permission of.

ANGUS - YOUNG ASSOCIATES, INC.
Copyright © 2022 All Rights Reserved

PROJECT NUMBER
74660

APPROVED BY
JJS

REVIEWED BY
BTW

DRAWN BY
SMF

STRUCTURAL DETAILS

S801

SCALE: 1/8"=1'-0"
PLOTTED BY: BradW
X:\74660\cad\74660sNS801.dgn
ORIGINAL SIZE: 24" x 36"

NEW LUMINAIRE SCHEDULE

CALLOUT	SYMBOL	LAMP	DESCRIPTION	BALLAST / DRIVER	MOUNTING	MODEL	INPUT WATTS	VOLTS	NOTE 1	NOTE 2	NOTE 3
A1		(1) LED, 5000K	SURFACE 2' X 4'	LED DRIVER	SURFACE	METALUX VT4LED-LD5-24-UNV-L850-CD-1-WL-MS-U OR EQUAL	179	120V 1P 2W	MOUNT TO BOTTOM OF STRUCTURE.	PROVIDE FIXTURE MOUNTED OCCUPANCY SENSOR SUITABLE FOR EXTREME CONDITIONS.	
A1/EM		(1) LED, 5000K	SURFACE 2' X 4'	LED DRIVER	SURFACE	METALUX VT4LED-LD5-24-UNV-L850-EL10W-CD-1-WL-MS-U OR EQUAL	179	120V 1P 2W	MOUNT TO BOTTOM OF STRUCTURE.	PROVIDE FIXTURE MOUNTED OCCUPANCY SENSOR SUITABLE FOR EXTREME CONDITIONS.	PROVIDE WITH 10W BATTERY BACKUP OPTION.
OA		(1) LED, 5000K	WALL MOUNT	LED DRIVER	WALL	MCGRAW-EDISON GWC-SA1-C-750-U-T4FT OR EQUAL	59	120V 1P 2W	MOUNT AT 17'-0" TO BOTTOM AFF UNLESS NOTED OTHERWISE.	CONTROL VIA EXTERIOR PHOTOCELL.	
OA/EM		(1) LED, 5000K	WALL MOUNT	LED DRIVER	WALL	MCGRAW-EDISON GWC-SA1-C-750-U-T4FT-CBP OR EQUAL	59	120V 1P 2W	MOUNT AT 17'-0" TO BOTTOM AFF UNLESS NOTED OTHERWISE.	CONTROL VIA EXTERIOR PHOTOCELL.	PROVIDE WITH BATTERY BACKUP.
X		(1) LED	EXIT SIGN	LED	SURFACE	SURE-LITES UX7-1 OR EQUAL	1,4	120V 1P 2W	EC TO PROVIDE WITH BATTERY BACKUP OPTION.	MOUNT AT 8'-0" TO BOTTOM OF FIXTURE AFG.	

EQUIPMENT SCHEDULE

CALLOUT	SYMBOL	DESCRIPTION	LOCATION	VOLTS	AMPS	KVA	HP	CIRCUIT	NOTE 1	NOTE 2	NOTE 3	DISCONNECT
OHD-1		OVERHEAD DOOR OPERATOR	SALT SHED	208V 3P 4W	4.85	1.75	1 HP	P1-8,10,12	PROVIDE WITH NON-FUSIBLE DISCONNECT SWITCH AT UNIT.			NON-FUSED

P1

ROOM
MOUNTING SURFACE
FED FROM A3
NOTE NEMA 3R RATED

VOLTS 208Y/120V 3P 4W
BUS AMPS 60
NEUTRAL 100%

AIC 22,000
MAIN BKR 60
LUGS STANDARD

CKT #	CKT BKR	LOAD KVA	CIRCUIT DESCRIPTION		CKT #	CKT BKR	LOAD KVA	CIRCUIT DESCRIPTION
1	20/1	1.43	LIGHTING	a	2	20/1	0.54	RECEPTACLE
3	20/1	0.295	LIGHTING	b	4	-/1	0	SPACE
5	20/1	1.43	LIGHTING	c	6	20/1	0	SPARE
7	-/1	0	SPACE	a	8	20/3	1.75	OHD-1
9	-/1	0	SPACE	b	10	|		
11	-/1	0	SPACE	c	12	|		
13	-/1	0	SPACE	a	14	-/1	0	SPACE
15	-/1	0	SPACE	b	16	-/1	0	SPACE
17	-/1	0	SPACE	c	18	-/1	0	SPACE

	CONN. KVA	CALC. KVA			CONN. KVA	CALC. KVA	
LIGHTING	3.16	3.95	(125%)	CONTINUOUS	0	0	(125%)
LARGEST MOTOR	1.75	2.18	(125%)	HEATING	0	0	(100%)
OTHER MOTORS	0	0	(100%)	NONCONTINUOUS	0	0	(100%)
RECEPTACLES	0.54	0.54	(50%>10)	KITCHEN EQUIP	0	0	(N/A)
				NONCOIN/DIVERSE	0	0	(N/A)
				TOTAL KVA	5.44	6.67	
				BALANCED THREE PHASE AMPS		18.5	

PHASE BALANCE PERCENT: PHASE A 141% PHASE B 48.3% PHASE C 111%

NEW RECEPTACLE SCHEDULE

CALLOUT	SYMBOL	NEMA	VOLTS	FEATURES	NOTE 1	NOTE 2	NOTE 3
WEATHERPROOF GFCI DUPLEX		5-20R	120V 1P 2W	GND	MOUNT @ 24" TO BOTTOM UNLESS NOTED OTHERWISE	PROVIDE WITH IN-USE WEATHER PROOF COVER	

NEW SWITCH SCHEDULE

CALLOUT	SYMBOL	NOTE 1	NOTE 2	NOTE 3
1 POLE SWITCH	$	MOUNT AT 44" TO BOTTOM UNLESS NOTED OTHERWISE		
EXTERIOR PHOTOCELL - LINE VOLTAGE	1	LOCATE HIGH ON WALL ON NORTH WALL OR WHERE SHOWN ON FLOORPLAN	ACCEPTABLE MODELS: INTERMATIC K4221C, TORK 2001, PRECISION ST-15	

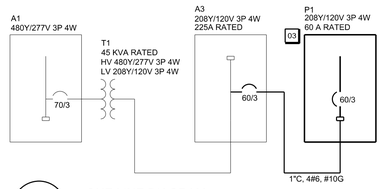

ONE LINE DIAGRAM

SCALE: NONE

NOTES:

1. DEVICES PROVIDED BY GENERAL CONTRACTOR. WIRED AND INSTALLED BY ELECTRICAL CONTRACTOR.
2. EXACT WIRING REQUIREMENTS VARY WITH MANUFACTURER. VERIFY EXACT WIRING REQUIREMENTS WITH EQUIPMENT INSTALLATION INSTRUCTIONS. COORDINATE WITH GENERAL CONTRACTOR.

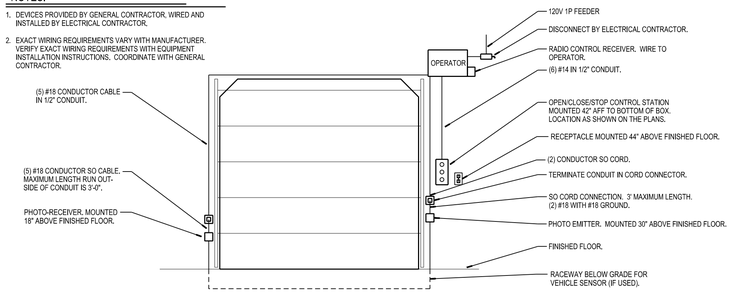

OVERHEAD DOOR CONTROL DETAIL

SCALE: NONE

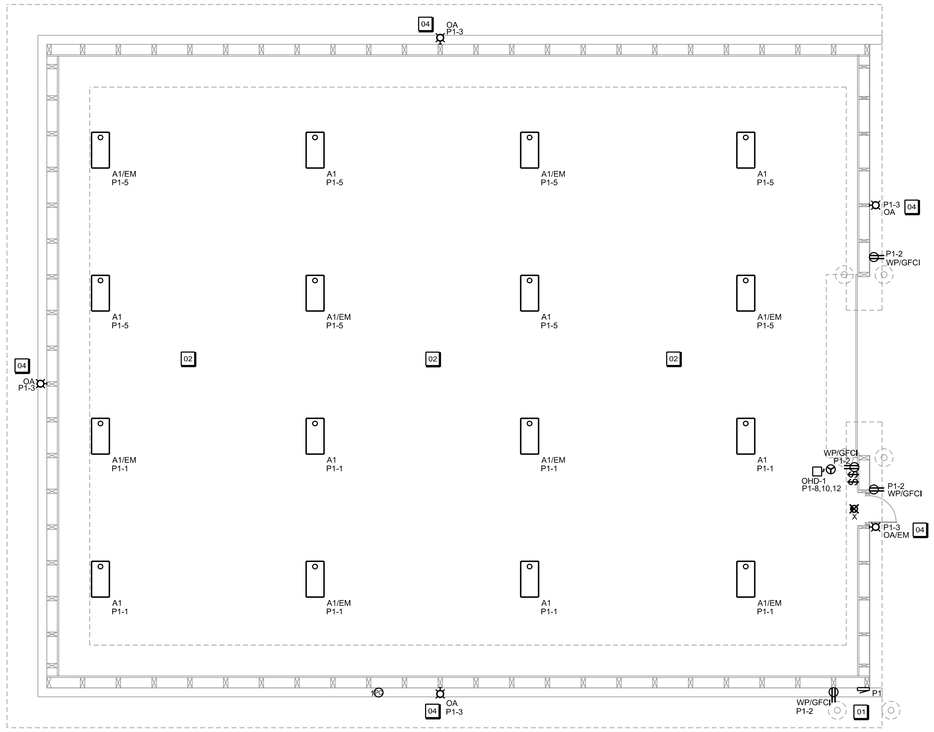

SALT SHED ELECTRICAL PLAN

SCALE: 1/8"=1'-0"

03
A3
ETR

GENERAL NOTES

1. THE BUILDING WILL REMAIN OCCUPIED AND IN USE DURING THE RENOVATION PROCESS. SCHEDULE THE WORK TO MINIMIZE DISRUPTION AND COORDINATE ANY NECESSARY DISRUPTIONS WITH THE OWNER.
2. THE INFORMATION SHOWN ON THESE DRAWINGS WAS OBTAINED FROM THE ORIGINAL CONSTRUCTION DRAWINGS WHERE AVAILABLE, AND FROM LIMITED FIELD REVIEW OF THE BUILDING AND SYSTEMS, PRIOR TO BIDDING. EACH CONTRACTOR SHALL INVESTIGATE THE EXISTING SYSTEM TO THE EXTENT NECESSARY TO ACCURATELY DETERMINE THE EXACT EXTENT OF THE REQUIRED WORK.
3. THE CONTRACTOR'S BID PRICE SHALL INCLUDE THE RESOLUTION OF MINOR DISCREPANCIES AT NO COST TO THE OWNER. PRIOR TO THE START OF THE RENOVATION THE CONTRACTOR SHALL RE-VERIFY ALL EXISTING ELECTRICAL SYSTEMS AND SYSTEM COMPONENTS AND REPORT ANY SIGNIFICANT DISCREPANCIES FOUND TO THE A/E FOR RESOLUTION. ANY CONTROLLED EQUIPMENT OR COMPONENTS NOT NOTED IN THE PLANS OR SPECS BUT FOUND PRIOR TO OR DURING COMPLETION OF THE NEW WORK SHALL ALSO BE REPORTED TO THE A/E.
4. THE CONTRACTOR SHALL FIELD VERIFY ACTUAL LOCATION AND SIZE OF EXISTING BRANCH CIRCUIT WIRING, PANEL CAPACITY, CONDITION, AND BREAKERS.
5. CONTRACTOR SHALL PROTECT ALL WALLS, CEILINGS, FLOORS, LIGHTS AND OTHER FINISHED SURFACES. IF DAMAGED, CONTRACTOR SHALL REPAIR OR REPLACE TO MATCH EXISTING CONDITIONS AT NO ADDITIONAL COST TO THE OWNER. VERIFY LOCATIONS OF AND PROTECT EXISTING INTERIOR ELECTRICAL AND MECHANICAL UTILITIES AND SERVICES.
6. ANY ELECTRICAL EQUIPMENT FOUND TO BE NON-FUCTIONAL OR IN NEED OF REPAIR OR MAINTENANCE WORK SHALL BE REPORTED TO THE A/E AND THE OWNER.
7. ELECTRICAL CONTRACTOR TO CALCULATE VOLTAGE DROP OF ALL BRANCH CIRCUITS EXCEEDING 100' AND INCREASE CONDUCTOR AND GROUND SIZES AS REQUIRED TO MAINTAIN LESS THAN 5% COMBINED FEEDER/BRANCH VOLTAGE DROP AT THE FARTHEST LOAD.
8. EXTERIOR LIGHT FIXTURES ARE TO BE CONTROLLED BY EXTERIOR TYPE 1 PHOTOCELL.

KEYNOTES

01 EC TO INSTALL NEW 18-POLE 208Y/120V 3P 4W PANEL WITH 60A MAIN. THE NEW PANEL IS TO BE FED FROM EXISTING PANEL A3 LOCATED IN THE DPW BUILDING TO THE SOUTH VIA UNDERGROUND FEEDER. NEW PANELBOARD IS TO BE NEMA 3R RATED FOR OUTDOOR INSTALLATION.

02 ELECTRICAL INSTALLATIONS ARE TO BE CORROSIVE RESISTANT.

03 EXISTING PANELBOARD A3 LOCATED WITHIN EXISTING DPW BUILDING. FEED NEW PANEL P1 FROM SPARE 60A/3P BREAKER.

04 ALL CONDUIT FEEDING EXTERIOR LIGHT FIXTURES IS TO BE ROUTED THOUGH THE BUILDING.

ANGUS-YOUNG
ARCHITECTS/ENGINEERS
Janesville | Madison

ROCK COUNTY PUBLIC WORKS

ORFORDVILLE SALT SHED

734 WEST BELOIT ST.
ORFORDVILLE, WI

ROCK COUNTY STATE OF WISCONSIN

ISSUANCES / REVISIONS		
NO:	DESCRIPTION:	DATE:
BD	BID/CONSTRUCTION	02/01/2023

1:20:31 PM 1/13/2023

Due to electronic distribution, this drawing may not be printed to the scale indicated on the drawings. Do NOT use scale to determine dimensions or sizes.

No part of this drawing may be used or reproduced in any form or by any means, or stored in a database or retrieval system, without prior written permission of.

ANGUS - YOUNG ASSOCIATES, INC.
Copyright © 2022 All Rights Reserved

PROJECT NUMBER
74660

APPROVED BY
JJS

REVIEWED BY
BTW

DRAWN BY
MRA

SALT SHED
ELECTRICAL PLAN
AND ONE LINE DIAGRAM

E101

SCALE: 1/8"=1'-0"
PLOTTED BY: BradW
X:\74660\cad\74660hE101.dgn
ORIGINAL SIZE: 24" x 36"

GENERAL NOTES

1. THE BUILDING WILL REMAIN OCCUPIED AND IN USE DURING THE RENOVATION PROCESS. SCHEDULE THE WORK TO MINIMIZE DISRUPTION AND COORDINATE ANY NECESSARY DISRUPTIONS WITH THE OWNER.
2. THE INFORMATION SHOWN ON THESE DRAWINGS WAS OBTAINED FROM THE ORIGINAL CONSTRUCTION DRAWINGS WHERE AVAILABLE, AND FROM LIMITED FIELD REVIEW OF THE BUILDING AND SYSTEMS. PRIOR TO BIDDING, EACH CONTRACTOR SHALL INVESTIGATE THE EXISTING SYSTEM TO THE EXTENT NECESSARY TO ACCURATELY DETERMINE THE EXACT EXTENT OF THE REQUIRED WORK.
3. THE CONTRACTOR'S BID PRICE SHALL INCLUDE THE RESOLUTION OF MINOR DISCREPANCIES AT NO COST TO THE OWNER. PRIOR TO THE START OF THE RENOVATION THE CONTRACTOR SHALL RE-VERIFY ALL EXISTING ELECTRICAL SYSTEMS AND SYSTEM COMPONENTS AND REPORT ANY SIGNIFICANT DISCREPANCIES FOUND TO THE A/E FOR RESOLUTION. ANY CONTROLLED EQUIPMENT OR COMPONENTS NOT NOTED IN THE PLANS OR SPECS BUT FOUND PRIOR TO OR DURING COMPLETION OF THE NEW WORK SHALL ALSO BE REPORTED TO THE A/E.
4. THE CONTRACTOR SHALL FIELD VERIFY ACTUAL LOCATION AND SIZE OF EXISTING BRANCH CIRCUIT WIRING, PANEL CAPACITY, CONDITION, AND BREAKERS.
5. CONTRACTOR SHALL PROTECT ALL WALLS, CEILINGS, FLOORS, LIGHTS AND OTHER FINISHED SURFACES. IF DAMAGED, CONTRACTOR SHALL REPAIR OR REPLACE TO MATCH EXISTING CONDITIONS AT NO ADDITIONAL COST TO THE OWNER. VERIFY LOCATIONS OF AND PROTECT EXISTING INTERIOR ELECTRICAL AND MECHANICAL UTILITIES AND SERVICES.
6. ANY ELECTRICAL EQUIPMENT FOUND TO BE NON-FUCTIONAL OR IN NEED OF REPAIR OR MAINTENANCE WORK SHALL BE REPORTED TO THE A/E AND THE OWNER.
7. ALL EXPOSED LOW VOLTAGE CABLING TO BE IN CONDUIT. LOW VOLTAGE CABLING ABOVE CEILING IS TO BE PLENUM RATED.
8. ELECTRICAL CONTRACTOR TO CALCULATE VOLTAGE DROP OF ALL BRANCH CIRCUITS EXCEEDING 100' AND INCREASE CONDUCTOR AND GROUND SIZES AS REQUIRED TO MAINTAIN LESS THAN 5% COMBINED FEEDER/BRANCH VOLTAGE DROP AT THE FARTHEST LOAD.
9. EXTERIOR LIGHT FIXTURES ARE TO BE CONTROLLED BY EXTERIOR TYPE 1 PHOTOCELL.

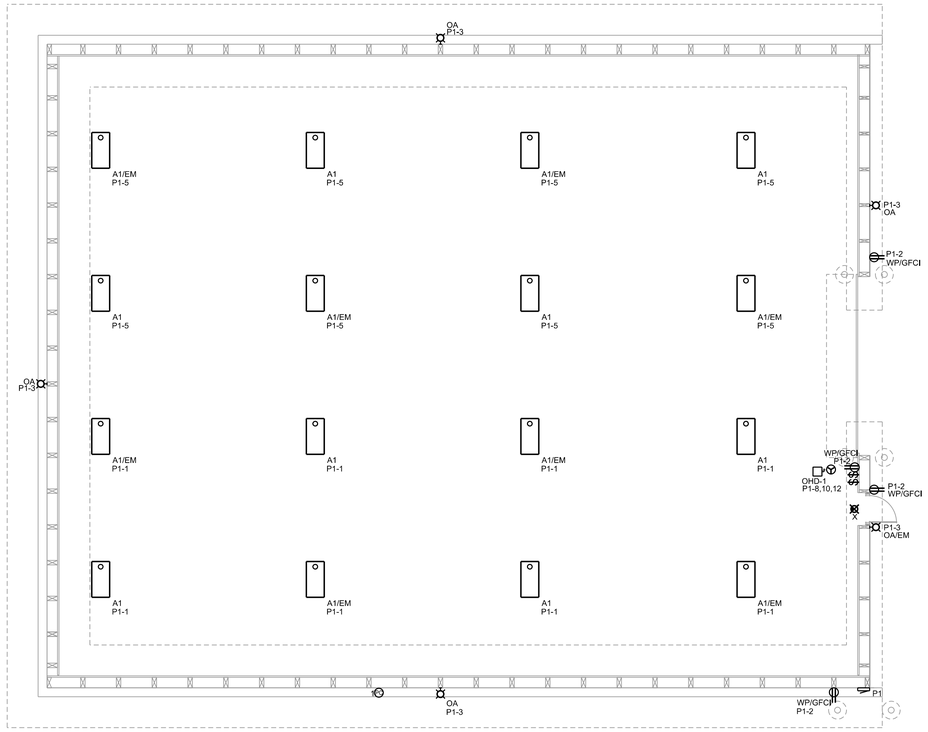

NORTH

SALT SHED PHOTOMETRIC CALCULATIONS

SCALE: 1/8"=1'-0"

SCALE: 1/8"=1'-0"

PLOTTED BY: BradW

X:\74660\cad\74660shE102.dgn

ORIGINAL SIZE: 24" x 36"

ANGUS-YOUNG
ARCHITECTS/ENGINEERS
Janesville | Madison

ROCK COUNTY
PUBLIC WORKS

ORFORDVILLE SALT
SHED

734 WEST BELOIT ST.
ORFORDVILLE, WI

ROCK COUNTY STATE OF WISCONSIN

ISSUANCES / REVISIONS

NO:	DESCRIPTION:	DATE:
BD	BID/CONSTRUCTION	02/01/2023

12:28:39 PM 1/13/2023

Due to electronic distribution, this drawing may not be printed to the scale indicated on the drawings. Do NOT use scale to determine dimensions or sizes.

No part of this drawing may be used or reproduced in any form or by any means, or stored in a database or retrieval system, without prior written permission of.

ANGUS - YOUNG ASSOCIATES, INC.
Copyright © 2022 All Rights Reserved

PROJECT NUMBER
74660

APPROVED BY
JJS

REVIEWED BY
BTW

DRAWN BY
MRA

SALT SHED
PHOTOMETRIC CALCULATIONS

E102